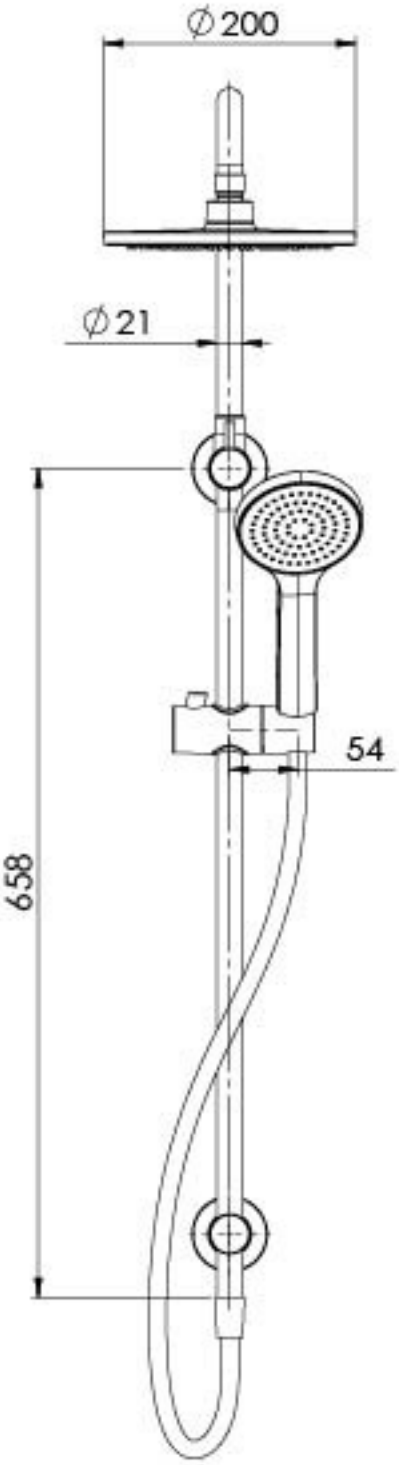
∅200
∅21
54
658

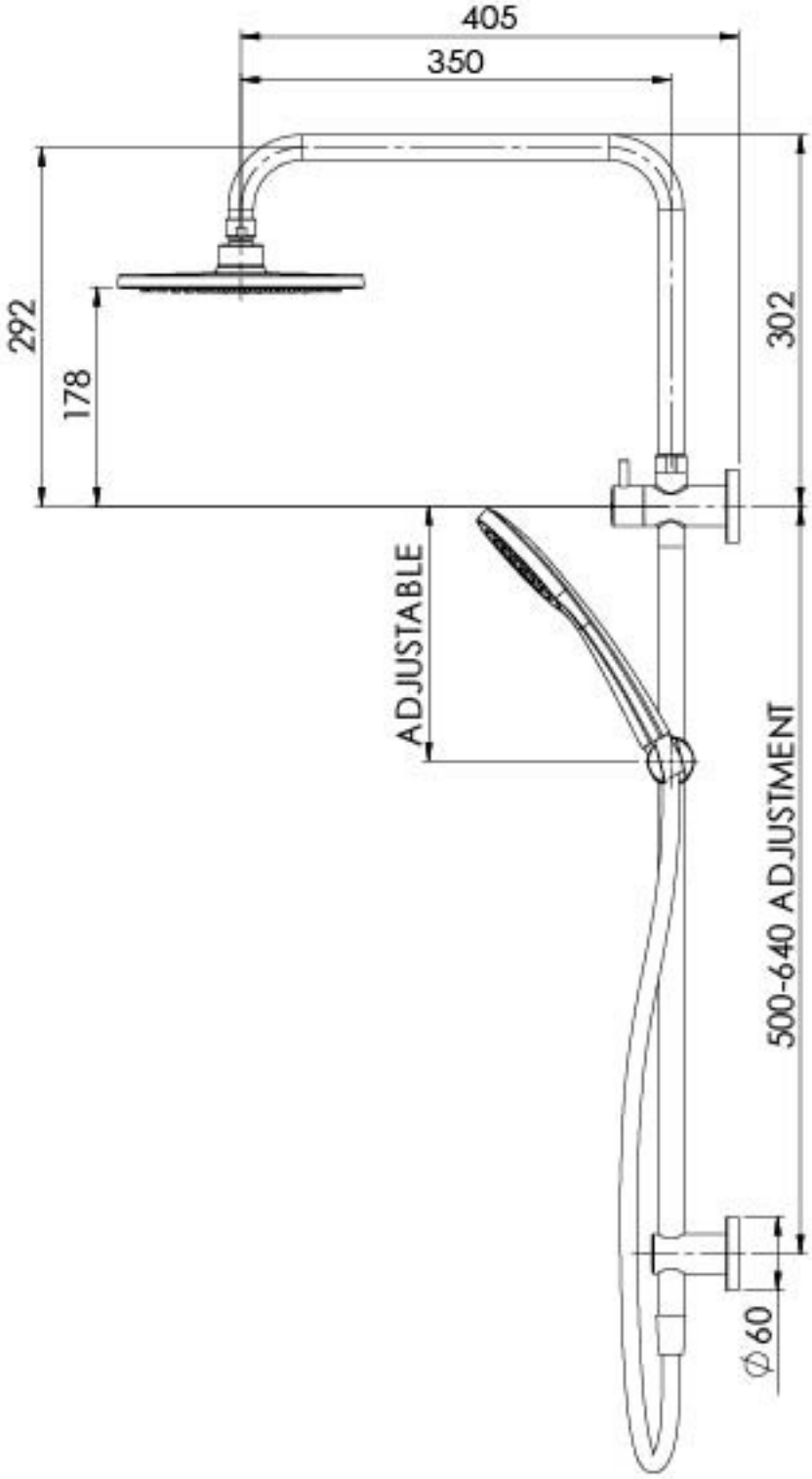
405
350
292
178
302
ADJUSTABLE
500-640 ADJUSTMENT
∅60