Capture Wall Hung Vanity



Prices include GST. All measurements are in millimeters and subject to change without notice. For products, please allow +/- 10mm tolerance for manufacturing variance.

Description

- Coastal Style With Three Sided V-Groove Cabinetry
- Satin White Solid Surface Moulded Top with Overflow
- Top Pull Opening, Option with Brushed Gold, Matte Black, and Brushed Nickel
- Luxury Dark Grey Interior with Drawer Diverter
- Thermolaminated cabinet finish available in Natural Oak and Walnut
- Overall Depth 470mm

Key Feature



Satin White Moulded Top



Three Sided V-Groove

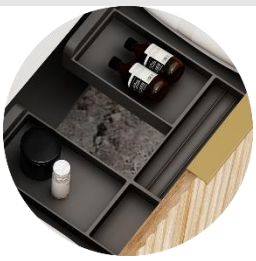

Drawer Diverter



Natural Oak/Walnut



Top Pull Handle

Configuration		Product Code	R.R.P
	610x465x405mm Natural Oak 1 Drawer	CAP600WH-OAK	$1139
	610x465x405mm Walnut 1 Drawer	CAP 600WH-WALNUT	$1139

Prices include GST. All measurements are in millimeters and subject to change without notice. For products, please allow +/- 10mm tolerance for manufacturing variance.

	760x465x405mm Natural Oak 1 Drawer	CAP750WH-OAK	$1359
	760x465x405mm Walnut 1 Drawer	CAP750WH-WALNUT	$1359
	910x465x405mm Natural Oak 1 Drawer	CAP900WH-OAK	$1469
	910x465x405mm Walnut 1 Drawer	CAP900WH-WALNUT	$1469
	1210x465x405mm Natural Oak 1 Drawer	CAP1200WH-OAK	$1579

Prices include GST. All measurements are in millimeters and subject to change without notice. For products, please allow +/- 10mm tolerance for manufacturing variance.



1210x465x405mm
Walnut
1 Drawer

CAP1200WH-WALNUT

$1579



1500x465x410mm
Natural Oak
2 Drawers

CAP1500WH-OAK

$2079



1500x465x410mm
Walnut
2 Drawers

CAP1500WH-WALNUT

$2079



1800x465x415mm
Natural Oak
2 Drawers

CAP1800WH-OAK

$2469



1800x465x415mm
Walnut
2 Drawers

CAP1800WH-WALNUT

$2469

Prices include GST. All measurements are in millimeters and subject to change without notice. For products, please allow +/- 10mm tolerance for manufacturing variance.

Capture 600mm Specification

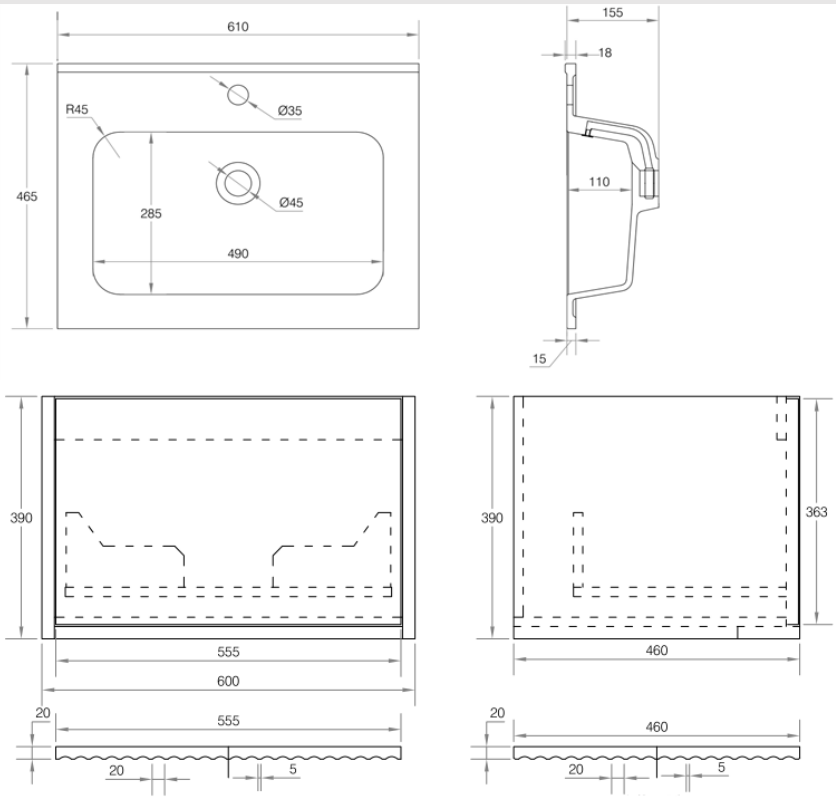

Capture 750mm Specification

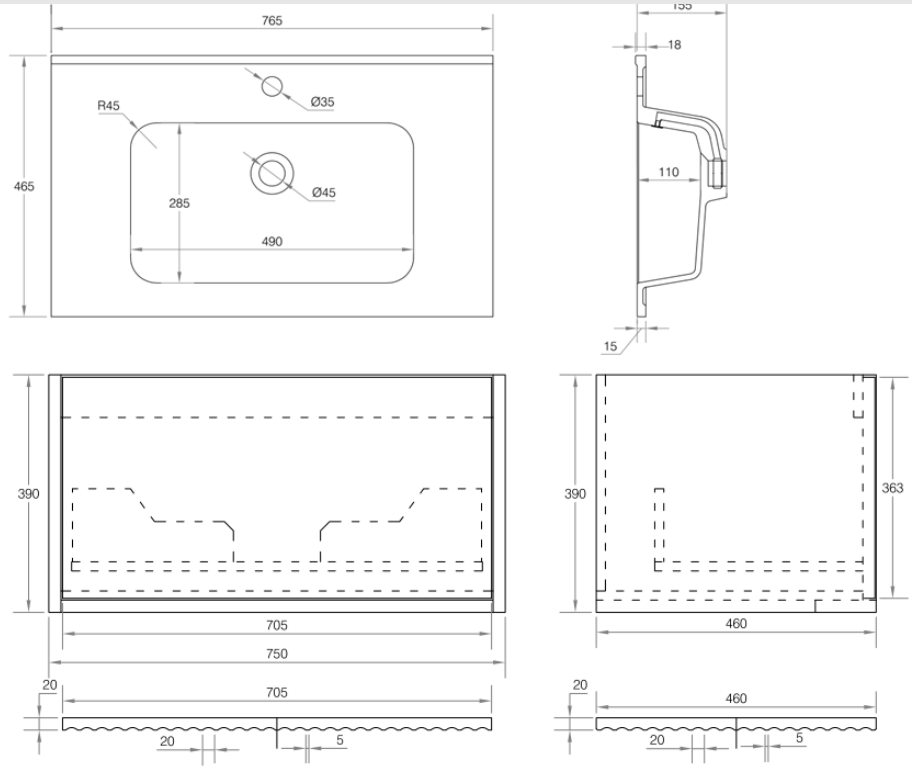

Prices include GST. All measurements are in millimeters and subject to change without notice. For products, please allow +/- 10mm tolerance for manufacturing variance.

Capture 900mm Specification

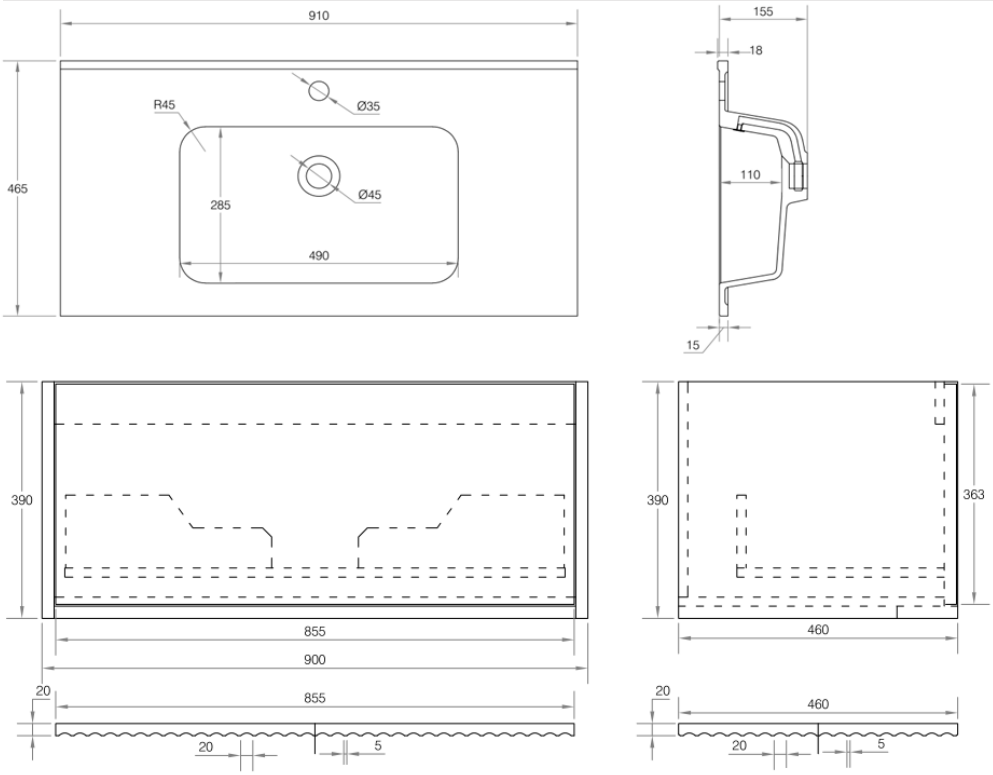

Capture 1200mm Specification

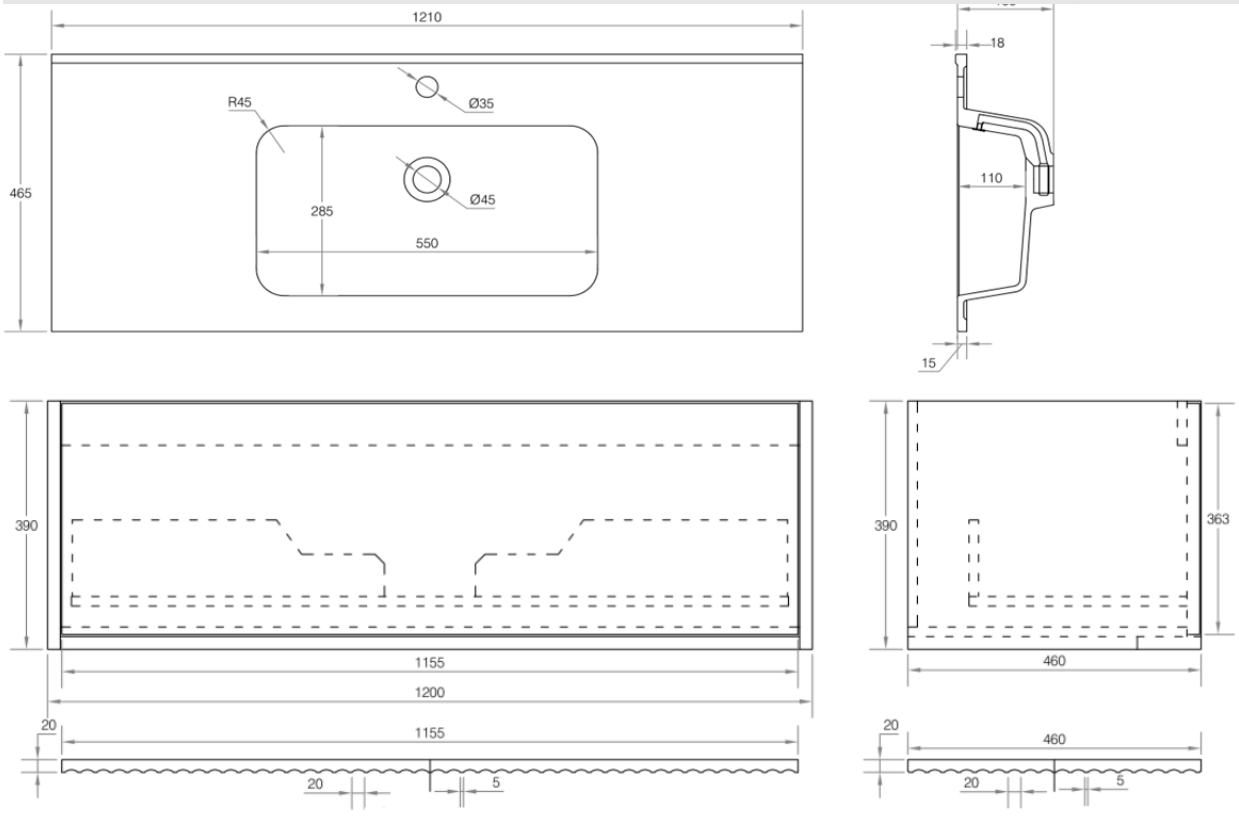

Prices include GST. All measurements are in millimeters and subject to change without notice. For products, please allow +/- 10mm tolerance for manufacturing variance.

Capture 1500mm Specification

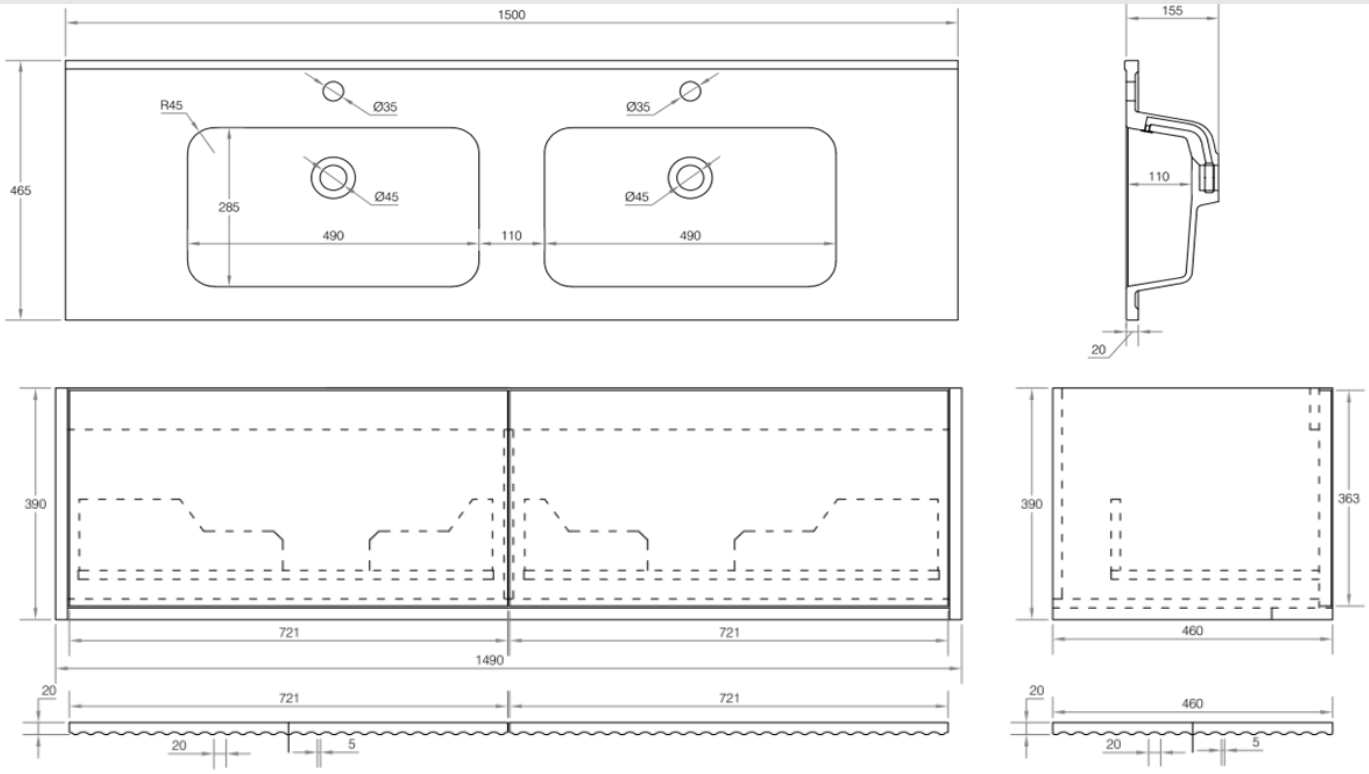

Capture 1800mm Specification

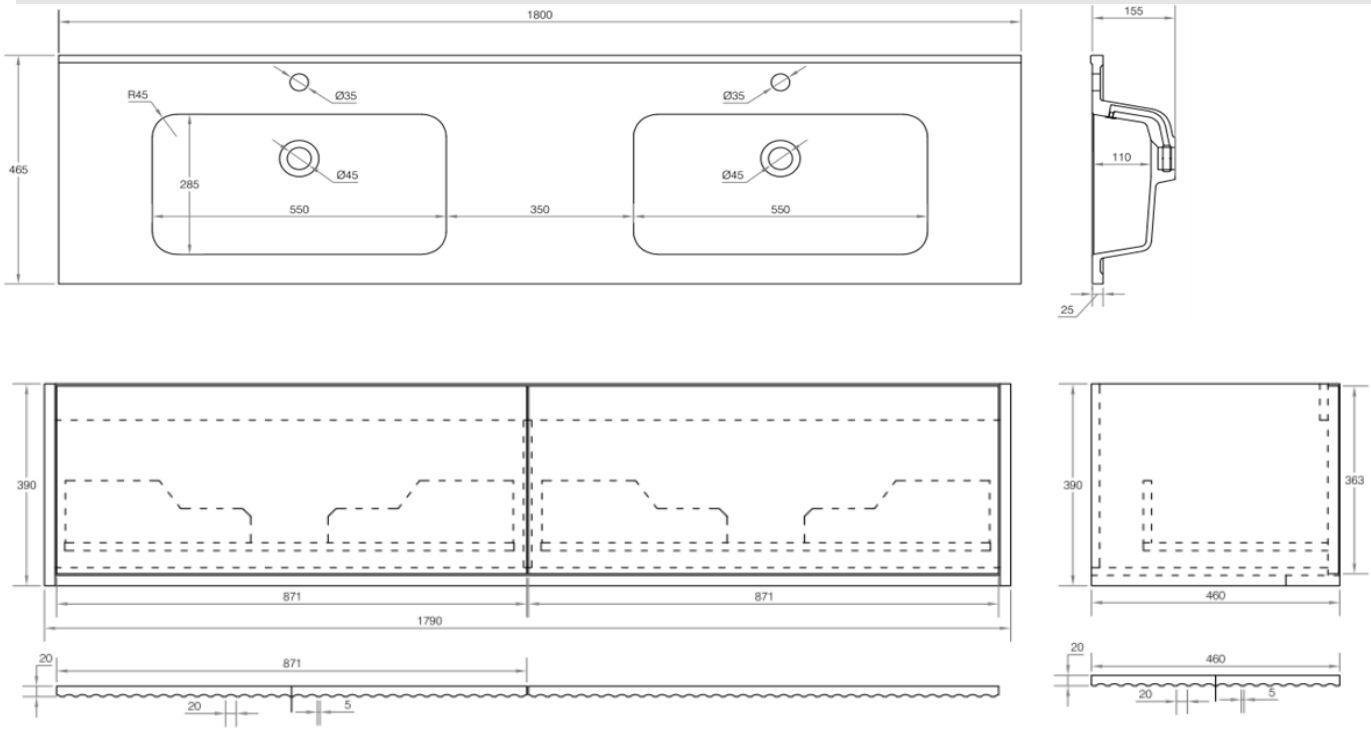

Prices include GST. All measurements are in millimeters and subject to change without notice. For products, please allow +/- 10mm tolerance for manufacturing variance.