CHELSEA

PIETRA BIANCA

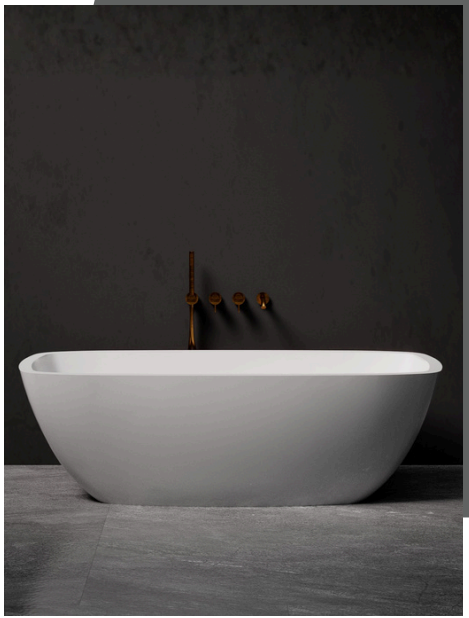

The Chelsea freestanding stone bath showcases a timeless, traditional design that naturally becomes the centrepiece of any bathroom. Its classic form pairs beautifully with the Julia basin, creating a cohesive and elegant space.

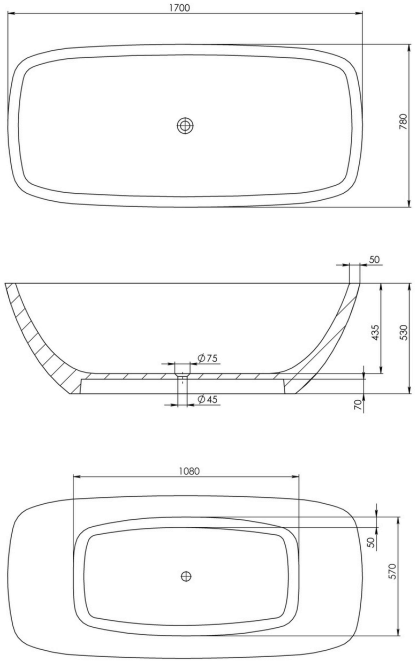



Pietra Bianca Stone

Our freestanding bath tubs are crafted from an eco-friendly, non-porous composite stone made from a unique blend of reclaimed marble, limestone, and engineered resins. The material is durable, smooth to the touch, and resistant to stains and moisture.

Available in a range of speckled and solid colours. Custom colours are available as a special order.

Approximate weight: 140kg

Product Size: 1700mm **Product Code:** PB4099-17

5 YEAR RESIDENTIAL MANUFACTURER'S WARRANTY	3 YEAR COMMERCIAL MANUFACTURER'S WARRANTY	1 YEAR OUTDOOR MANUFACTURER'S WARRANTY

+ An optional overflow and matching stone drain cover are available at an additional cost. These are special order items and must be ordered at time of purchase.