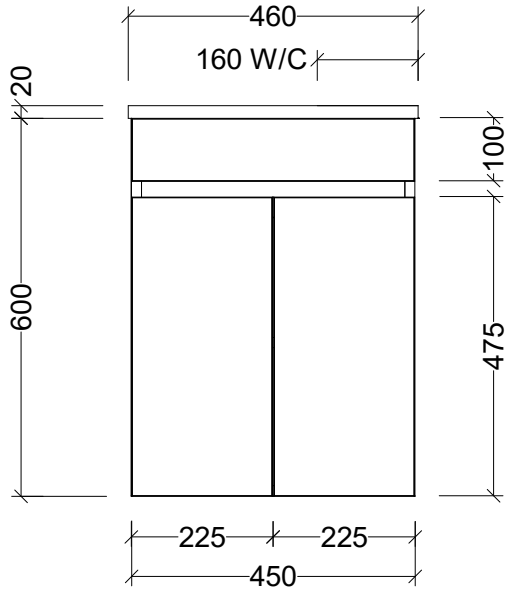

LH and RH Bowl Offset Options Available

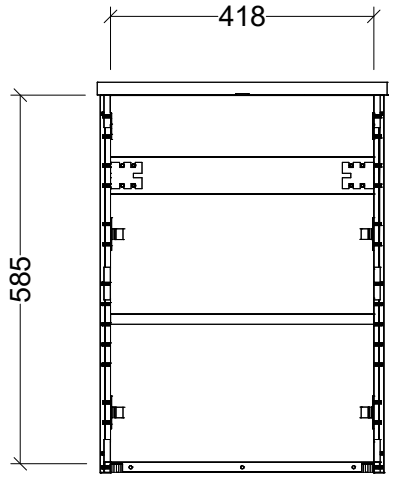

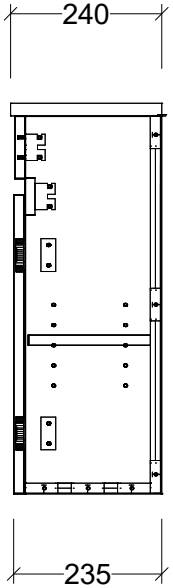

Timberline

CABINET DETAILS	
Range	Ensuite 460
Description	Offset Bowl Wall Hung
Cabinet SKU	ENS-VCO-460-L-X-W
TOP DETAILS	
Available Tops:	Ensuite Mineral

Timberline Bathroom Products Pty Ltd
22 Myrtle Drive, Armidale NSW 2350
www.timberline.com.au | 02 6773 8500

PLEASE NOTE: Due to the manufacturing process of ceramic tops, size variation (+/- 3%) is to be expected. E&OE. Copyright ©