Edge 450

VANITY ON KICKBOARD

NO OVERFLOW

Features

- Reversible, gloss white poly-marble basin-top
- Reversible, soft-close door, for left-hand or right-hand opening
- Bevelled edge pull-channel (long edge of door)
- Matching exterior and interior finish
- 16 mm thick backing board
- Includes cabinet and basin-top

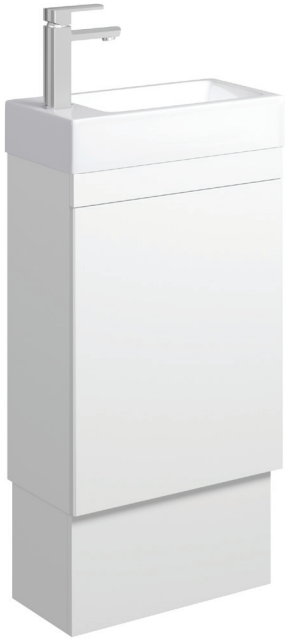

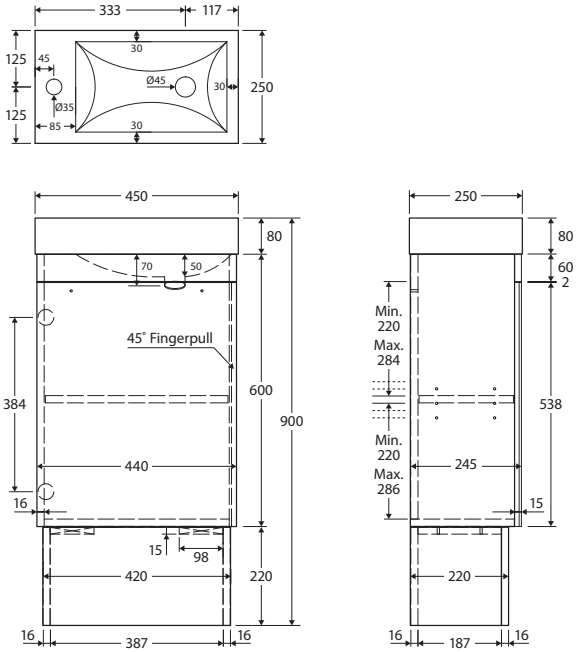



Available in

Satin White
45RWK

Scandi Oak
45RSK

Industrial
45RXK

Cleaning & Care

- Regularly clean with mild soapy water using a clean, soft cloth.
- Do not use harsh detergents, bleach, abrasive cleaners or cream/wax cleaners. These substances can result in scratches and/or deposit build-ups that will affect the appearance.
- Avoid placing hot objects, such as hair straighteners, on any surface as these will cause discolouration and marking.
- Spills of hair dye, after-shave lotion, nail polish and remover, aerosol spray and other harsh chemicals should be removed immediately to prevent damage and discolouration. Clean immediately with mild soapy water using a clean, soft cloth.

While we aim to ensure specifications are correct at the time of publication, Fienza reserves the right to make modifications without prior notice. Physical colour may vary from image shown.
All measurements are shown in millimetres. Always use physical product measurements for mark-ups and roughing-in as the technical drawing may differ from actual product received. Tapware not included.