Serenity
Basin Set Arc Spout

Nero

Lead Free

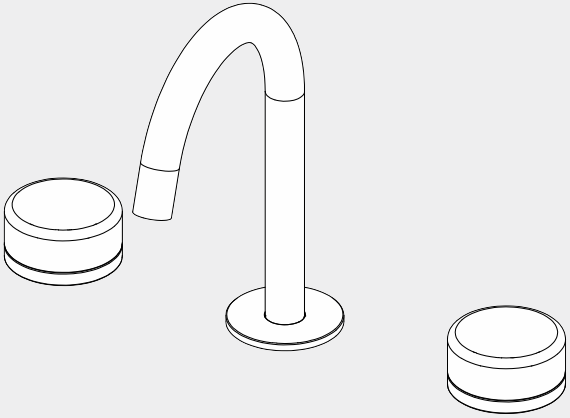



Versions:202412

Drawing

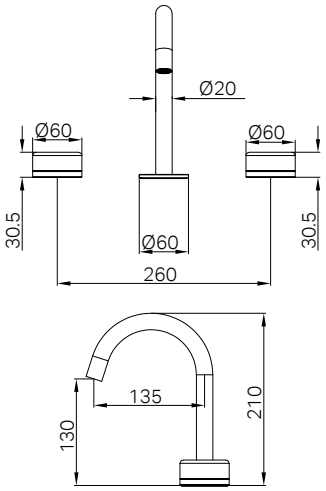

Specifications

Watermark License
WM-060073

Temperature Rating
Min 1˚C-Max 75˚C

Pressure Rating
Min 150kpa - Max 500kpa

Packaging Includes

1x Spout
2x Handwheels
1x Copper Tee Piece
2x Inlet Bodies
1x Installation Kits

*Dimensions are nominal measurements only.

Chrome

Gun Metal

Brushed Bronze

Matte Black

Brushed Gold

Brushed Nickel

Serenity Basin Set Arc Spout With Carrara Handle

24D011BZ/ 24D011BG / 24D011BN/24D011GM / 24D011MB / 24D011CH

Serenity Basin Set Arc Spout With Verde Alpi Handle

24D012BZ/ 24D012BG / 24D012BN/24D012GM / 24D012MB / 24D012CH

Serenity Basin Set Arc Spout With Rome Travertine Handle

24D013BZ/ 24D013BG / 24D013BN/24D013GM / 24D013MB / 24D013CH

Serenity Basin Set Arc Spout With Arabescato Corchia Handle

24D014BZ/ 24D014BG / 24D014BN/24D014GM / 24D014MB / 24D014CH

Serenity Basin Set Arc Spout With Calacatta Viola Handle

24D015BZ/ 24D015BG / 24D015BN/24D015GM / 24D015MB / 24D015CH

Serenity Basin Set Arc Spout With Metal Handle

24D016BZ/ 24D016BG / 24D016BN/24D016GM / 24D016MB / 24D016CH

Serenity Basin Set Arc Spout With Marquina Black Handle

24D117BZ/ 24D117BG / 24D117BN/24D117GM / 24D117MB / 24D117CH

Installation Instruction

GENERAL INSTRUCTIONS:

- This product must be installed by a licensed plumber. Ensure that the installation complies with the Australian/New Zealand Standard AS/NZS 3500.
- All pipework must be thoroughly flushed prior to the installation of the mixer. In-line filters must be fitted on both hot and cold supplies to prevent foreign particles from damaging the ceramic cartridge.
- All outlets used primarily for personal hygiene must deliver water at a safe temperature in accordance with regional regulations.

NOTE:

- Do not hydrostatic test the installation with this mixer installed. Damage to the ceramic cartridge may occur.
- Do not remove the ceramic cartridge from the mixer when installing.
- After installation, all connections must be checked for leaks.
- This mixer is not recommended for use in uncontrolled heating systems such as wet-backs or solar heating units unless a suitable tempering valve is fitted.
- If limited water flow is experienced, locate aerator and filter washers and clean away foreign material as required.
- It is the responsibility of the plumber to ensure a waterproof seal is achieved between the product and mounting surface. If in doubt about the quality of the seal, remove the product and reinstall.

MAINTENANCE AND CARE:

- Regularly check the mixer and connections for signs of wear or leaks.
- Clean the tap with mild soapy water to maintain its appearance, avoiding harsh chemicals and abrasive materials that may damage the finish.
- Avoid contact with highly pigmented substances such as red wine, coffee, and ink, as they may cause permanent staining.

FINAL INSPECTION:

- Ensure the tap operates smoothly and that there are no leaks at the connections.
- Clean the area and the newly installed tap with a soft cloth to remove any installation residues.

Components

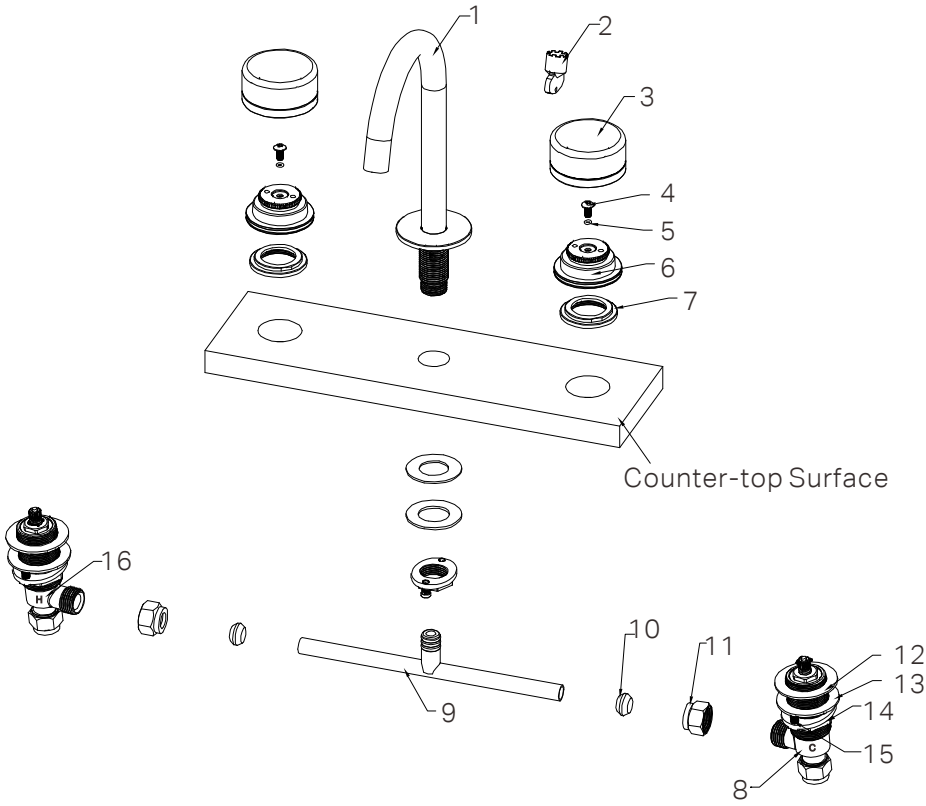

Parts

1. 1x Spout
2. 1x Aerator Spanner
3. 2x Handwheels
4. 2x M6 Screws
5. 2x O-Rings
6. 2x Spindle Adaptors
7. 2x Base Plates
8. 1x Cold Inlet Body
9. 1x Copper Tee Piece
10. 2x Joints
11. 2x Hex Nuts
12. 3x Rubber Washers
13. 3x Metal Washers
14. 3x Locking Nuts
15. 6x M6 Screws
16. 1x Hot Inlet Body

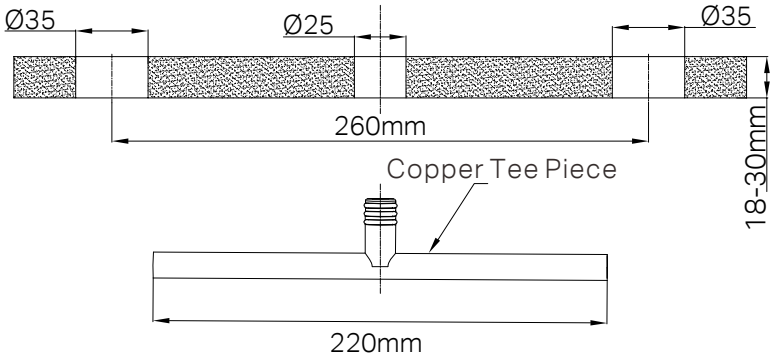

Note: The copper tee piece can be cut to
a minimum length of 160mm to customize
the distance between the hot and cold handles.

1. Ensure the counter-top hole dimensions meet the specifications (Ø25mm and two Ø35mm diameter holes, with a counter-top thickness from 18-30mm).

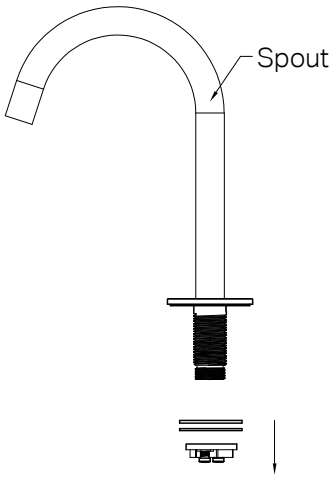

2. Remove the locking nut, metal washer, and rubber washer from the spout.

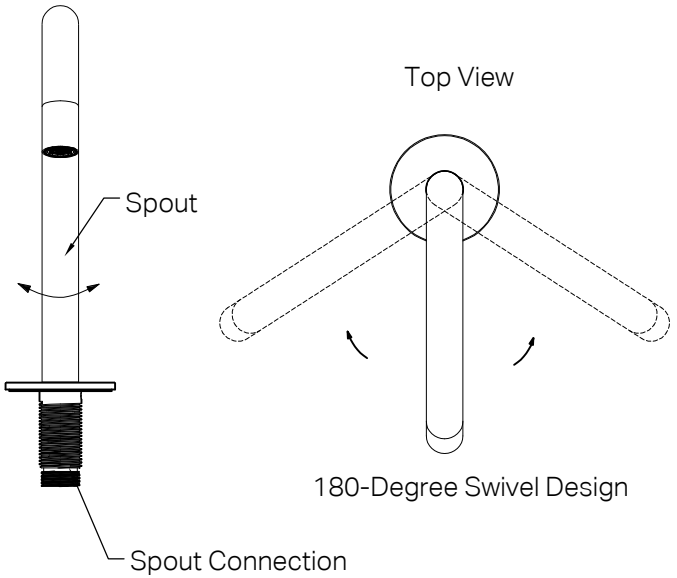

3. Secure the spout assembly at the spout connection.
Rotate the spout to the desired position and align the spout approximately to the center of its rotation range.

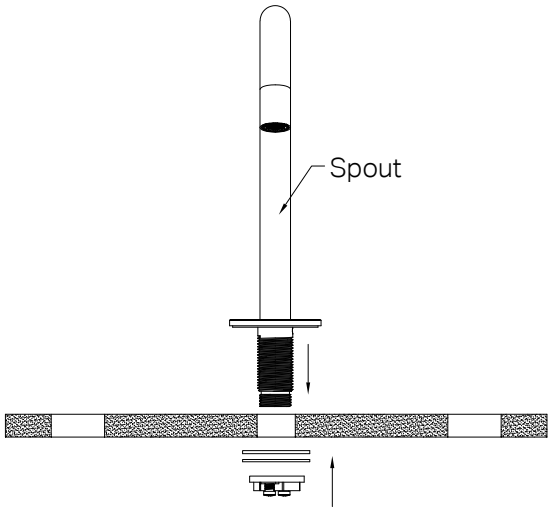

4. Insert the spout into the counter-top hole.
Reattach the rubber washer, metal washer, and locking nut underneath the counter-top.
Tighten the locking nut securely using the two M6 screws, ensuring the spout is firmly secured.

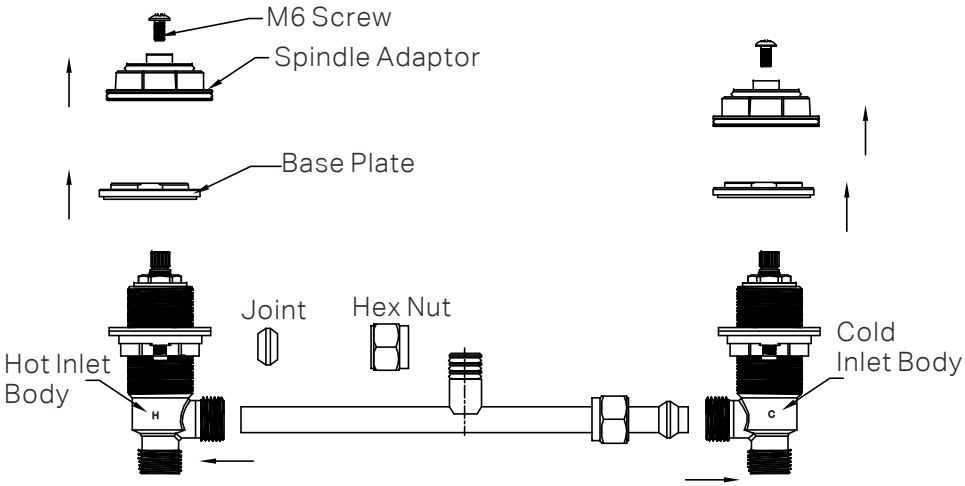

5. Carefully disassemble all components in the order illustrated above.
Attach the Hex nuts and joints to the copper tee piece.
Connect the copper tee piece to the inlet bodies and tighten the Hex nuts securely.
Do not to overtighten.
Note: The hot inlet body is installed on the left, and the cold inlet body is installed on the right.

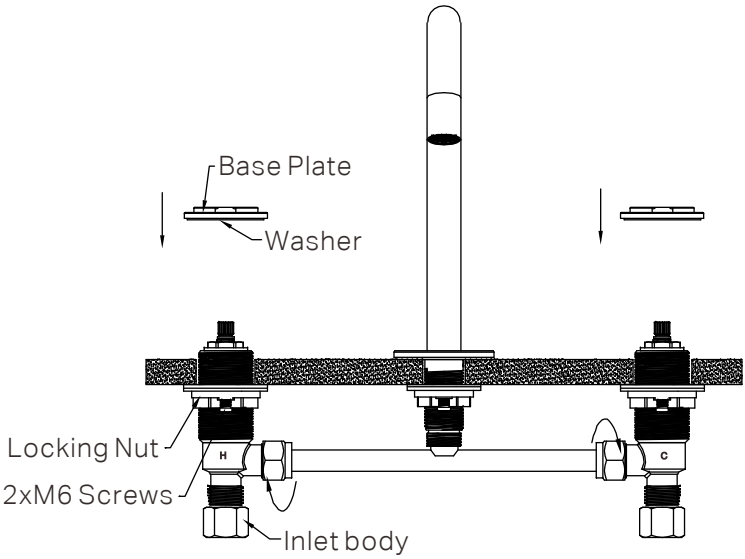

6. Insert the body set from underside of the counter-top. Using base plate and M6 screws to securing the body set, ensuring a firm connection. Ensure the washer is properly seated between the base plate and the body set.

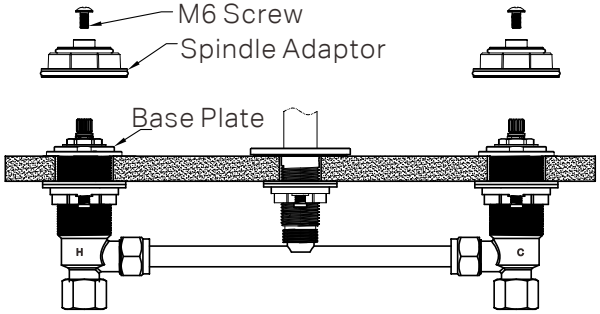

7. Screw the spindle adaptors onto the spindles and secure them with the M6 screws.

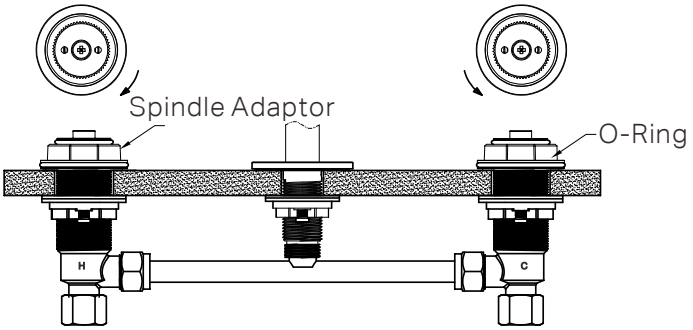

8. Apply lubrication evenly to the O-Ring. Refer to the diagram to identify the correct O-Ring position. Ensure the O-Ring is well-lubricated to prevent damage during installation.
For Metal Handwheels:
Rotate the left spindle adaptor clockwise to its fully closed position.
Rotate the right spindle adaptor counterclockwise to its fully closed position.
Refer to the diagram for clarification.
For Marble Handwheels:
No adjustment to the spindle adaptor is necessary.

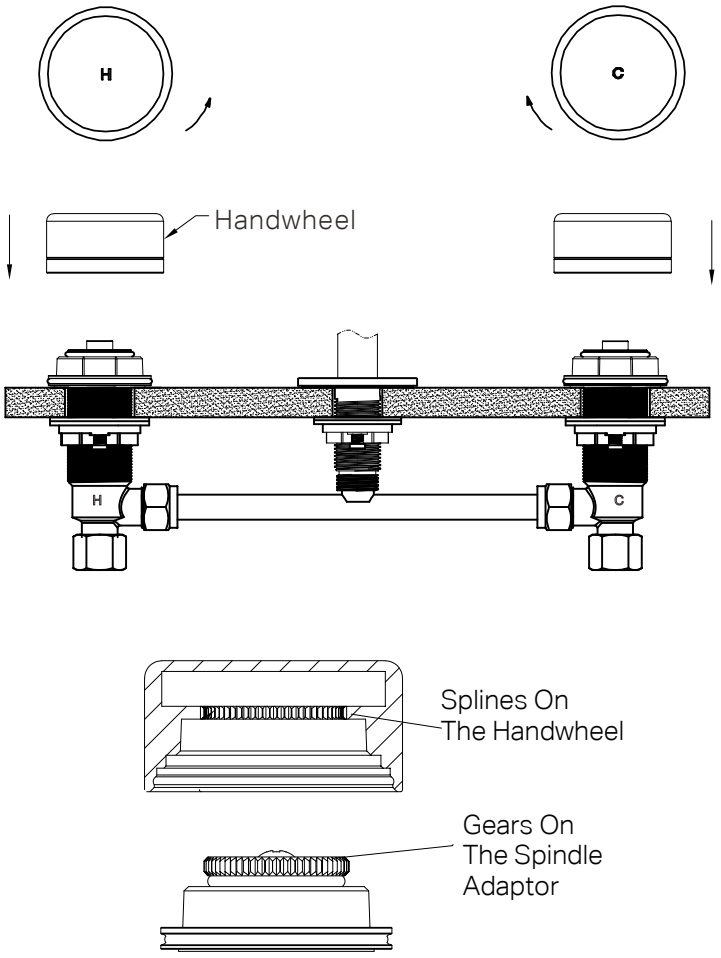

9. Align the Handwheels with the Spindle Adaptors:
Ensure the splines on the underside of the handwheel align perfectly with the gears on the spindle adaptor, as shown in the above diagram. This alignment is crucial for proper functionality.
Secure the Handwheels:
Once aligned, press the handwheels down firmly onto the spindle adaptors.
Tip:
For metal handwheel, ensure the handwheel marked "H" is installed on the left side and the handwheel marked "C" is installed on the right side.

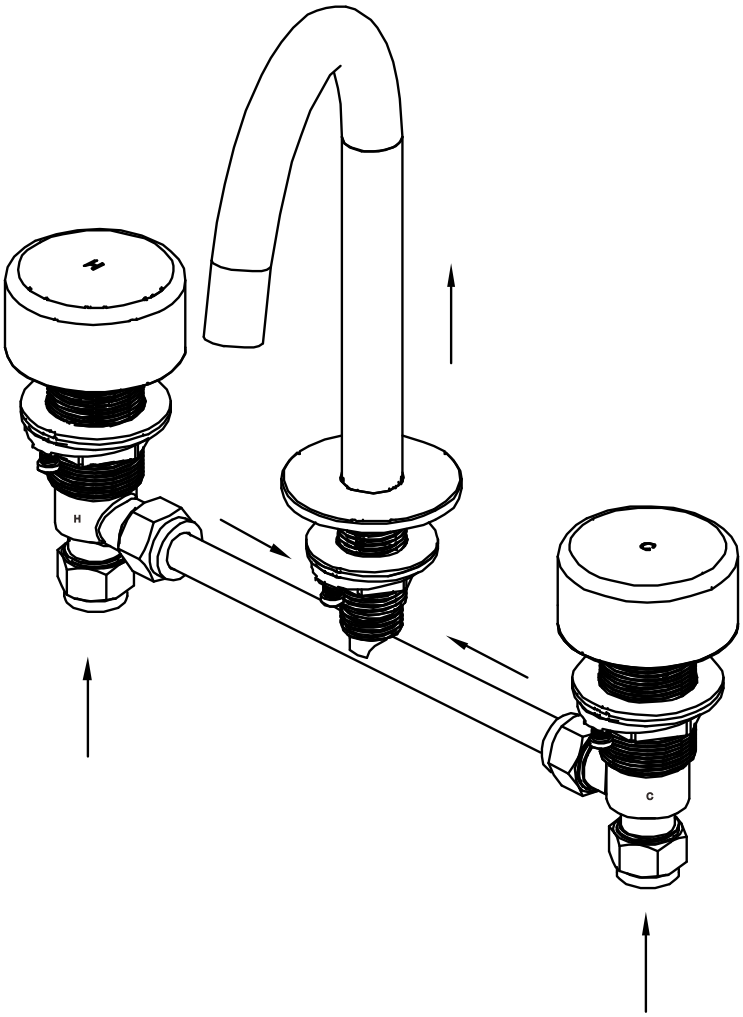

10. Turn on the drainage system and water supply, and inspect all connections for any signs of leakage.
Note: If you bought marble handwheel products, there are no hot/cold markings are applied to the handwheels.

3170860

Nero





