Mecca Care 32mm DDA Accessible Toilet 90 Degree Bent Tube Grab Rail 600X1000mm With Toilet Roll Holder

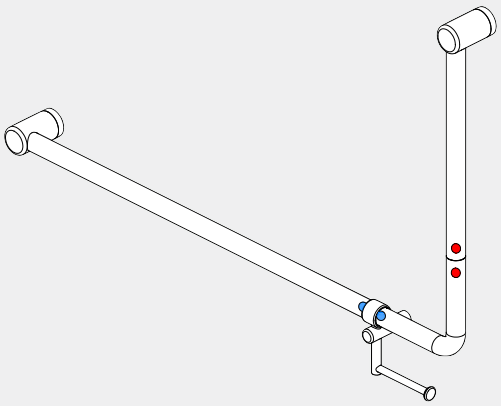

Versions:202504

Drawing

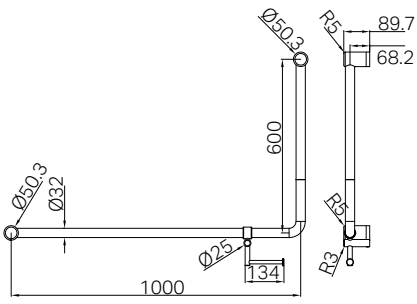

Packaging Includes

1 x Vertical Grab Bar
1 x Connecting Elbow
1 x Horizontal Grab Bar
1 x Support Ring
1 x Installation Kits
1 x Vertical Rod
1 x Holder Rod
1 x Screw Rod

Finish & SKU

Chrome
NRCR3290ehCH

Gun Metal
NRCR3290ehGM

Matte Black
NRCR3290ehMB

Brushed Gold
NRCR3290ehBG

Brushed Nickel
NRCR3290ehBN

Brushed Bronze
NRCR3290ehBZ

*Dimensions are nominal measurements only.

FEATURES

- 32mm diameter for a comfortable grip.
- Supports up to 150kg grab force for enhanced safety.
- Approved for Australian AS1428.1 for DDA Accessible toilets, reports available on request.
- Constructed from high-quality stainless steel for durability.
- Corrosion-resistant finish for long-lasting performance.
- Available in 6 premium finishes.
- The same rail can be mounted on left or right hand side.

Installation Instruction

GENERAL INSTRUCTIONS AND WARNINGS

- Before installation, make sure the wall surface is clean and dry to ensure a secure attachment.
- When tightening screws, do not apply excessive force to prevent damage to the wall or the fixtures.
- Use the correct tools: a drill with a 8mm or 3mm bit, screwdriver, and level.
- Wear appropriate safety gear, such as gloves and safety glasses, to protect yourself during installation.
- Before drilling, check the wall for any hidden pipes or electrical wires to avoid accidental damage.
- Ensure all measurements are accurate before drilling holes to prevent misalignment of the accessories.

MAINTENANCE AND CARE

- Clean the accessories with a soft, damp cloth. Avoid using abrasive cleaners, which can damage the finish.

WARNING

These rails are designed to be mounted onto wall studs or masonry walls. Installation is recommended to be completed by qualified trades person who complies with the AS 1428.1-2009 design for access and mobility standard. It is recommended rail location is determined by a qualified occupational therapist or trained professional to the AS 1428.1-2009 standard. Correct installation is required to ensure safe, long term operation. Incorrect mounting can result in reduced capacity of the rail which can result in injury to user and damage to the wall.

The clearance above a horizontal grab rail shall extend above the top of the grab rail by not less than 600 mm. The clearance below a horizontal or angled rail shall be a minimum of 50 mm except at fixing points.

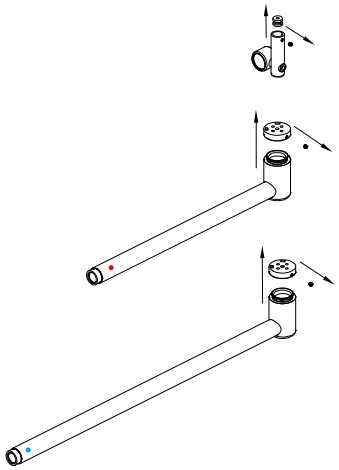

1. Unscrew the 3 mounting brackets from the two grab bars and support ring using an Allen key.

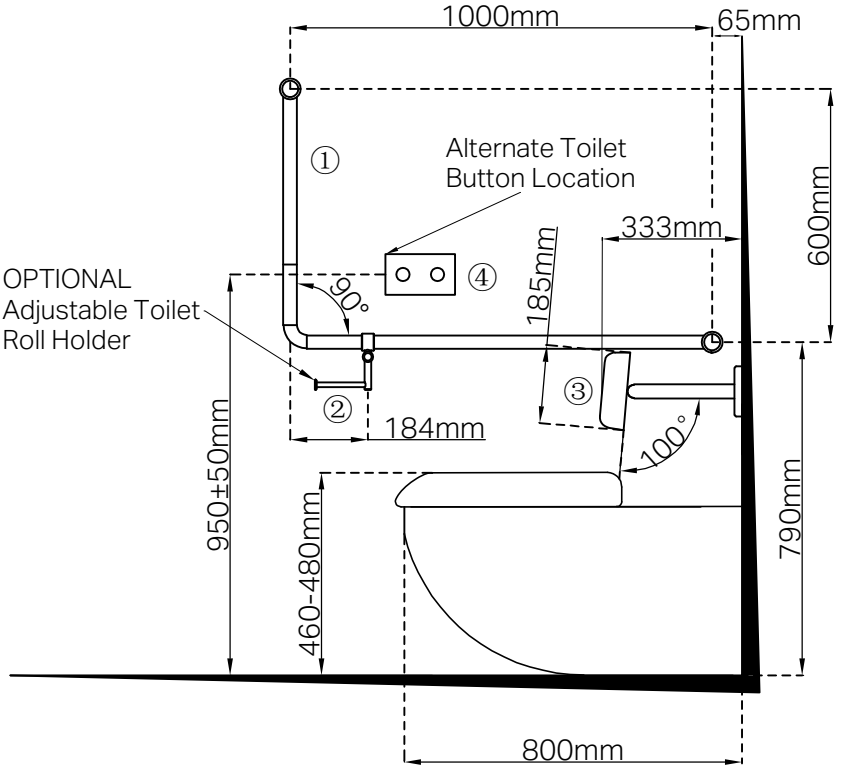

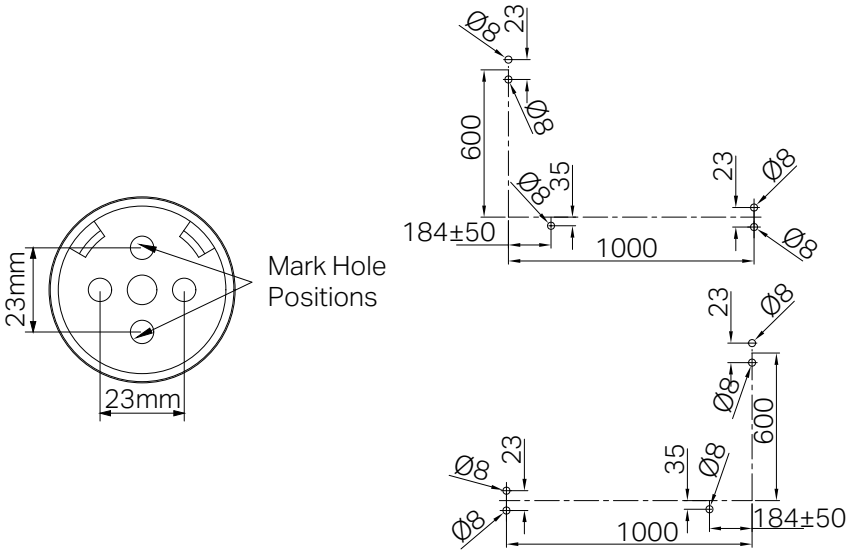

2. Locate wall studs, install into at least one stud.
Place wall seal/mounting bracket on wall at correct height over centre of stud and mark hole positions on wall refer above picture.
(minimum 2 supplied screws per bracket).
Tip: Rail height is 790mm above the ground.

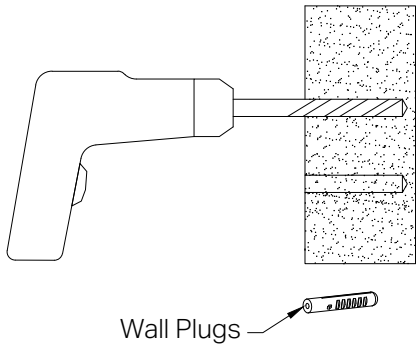

3. Drill pilot holes into wall stud approximately 60mm deep to suit mounting screws (and expansion plug if required).
Tip:3mm hole for screw into timber or 8mm hole for expansion plug.

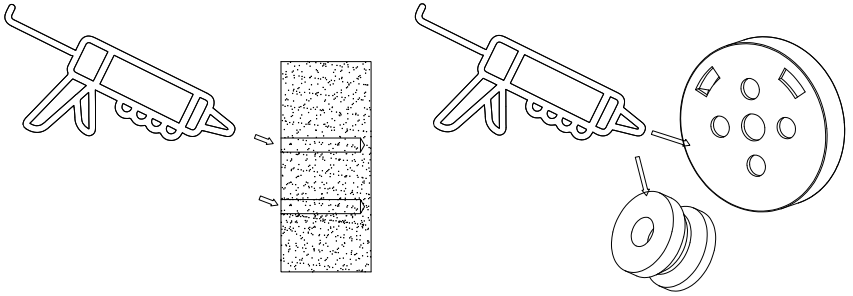

4. Apply small amount of silicon to mounting brackets and wall in and around the screw holes.

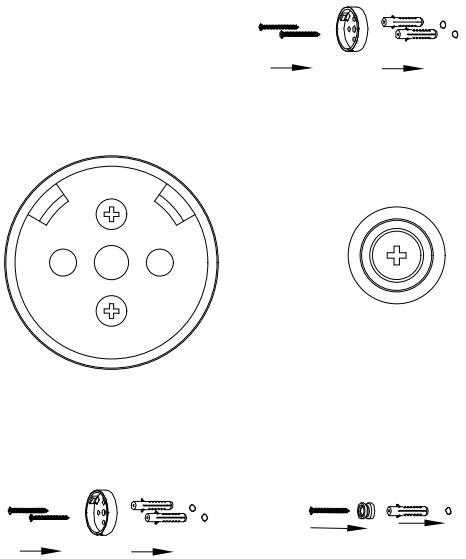

5. Insert the expansion plugs into the drilled holes using a hammer. Secure the three brackets firmly with expansion screws.
Tip: Use appropriate mounting screws for the wall stud material, supplied screws are for timber wall studs.

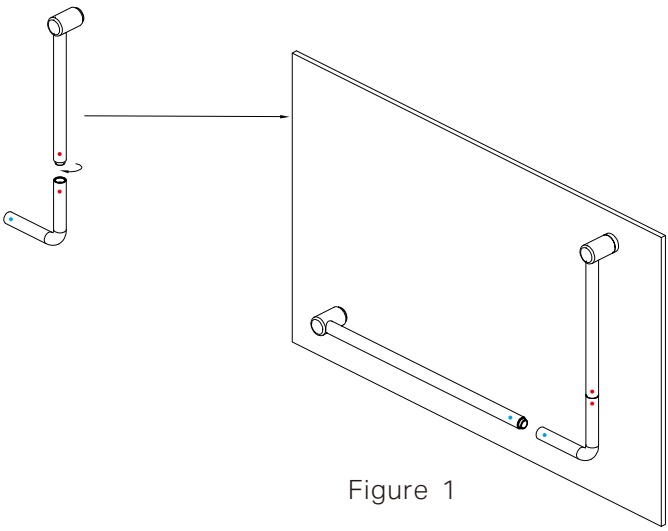

Figure 1

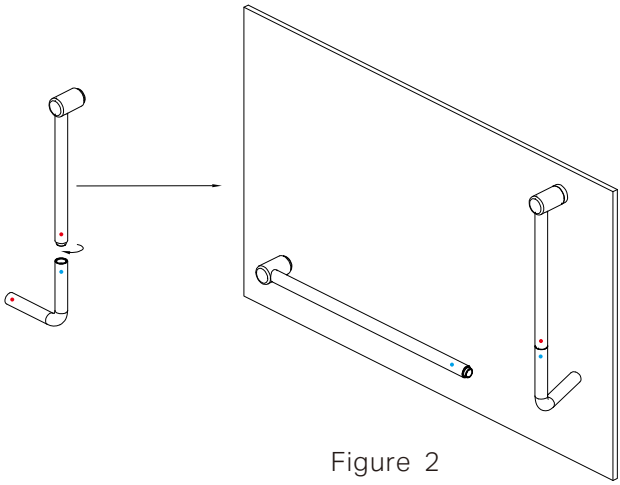

Figure 2

6. Connect the Vertical Grab Bar (with the red sticker) to the Connecting Elbow with the red sticker on one end as shown in the figure 1. This is the correct connection.
If the Vertical Grab Bar(with the red sticker) to the Connecting Elbow(with the bule sticker) on one end, the situation shown in the figure 2 which is an incorrect connection and should be avoided.
Note: When connect the Connecting Elbow to the Vertical Grab Bar and Horizontal Grab Bar, make sure to match the sticker colors correctly—red to red, blue to blue.

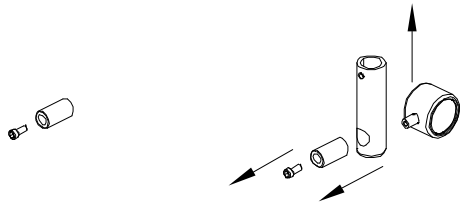

7. Disassemble the support ring as above picture.

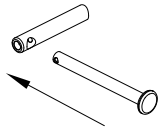

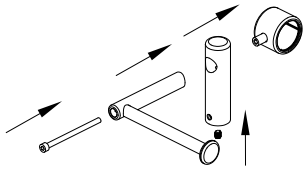

8. Connect the vertical rod, the holder rod and the support ring by a screw rod. Do not over tighten the screw rod.

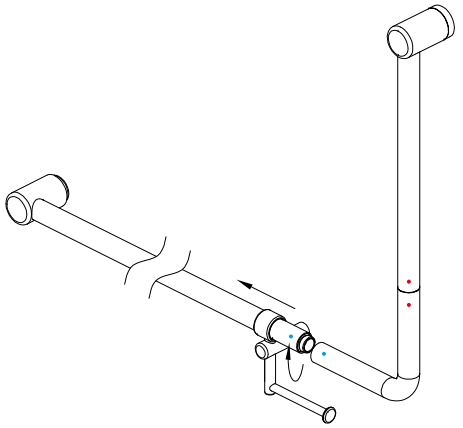

9. Slide the support ring onto the horizontal grab bar, and then connect the horizontal grab bar with the connecting elbow.

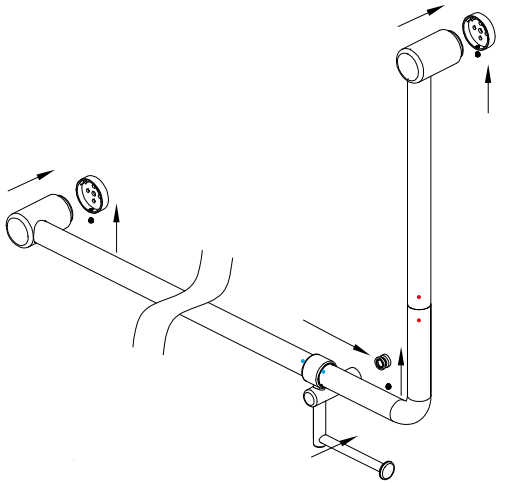

10. Align the grab rail with the three brackets and screw it firmly using Allen key.

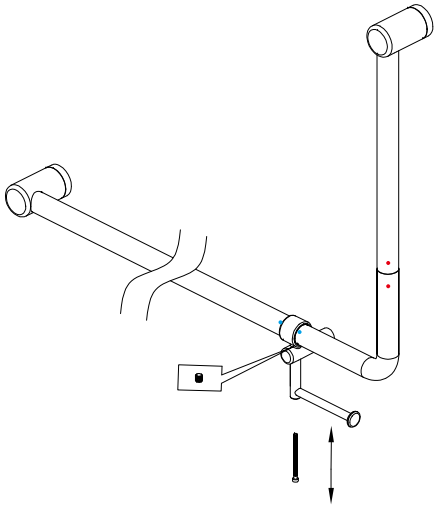

11.Unscrew the screw rod of support ring, and screw the grub screw in the support ring to tighten the support ring, then screw the screw rod back to the support ring.

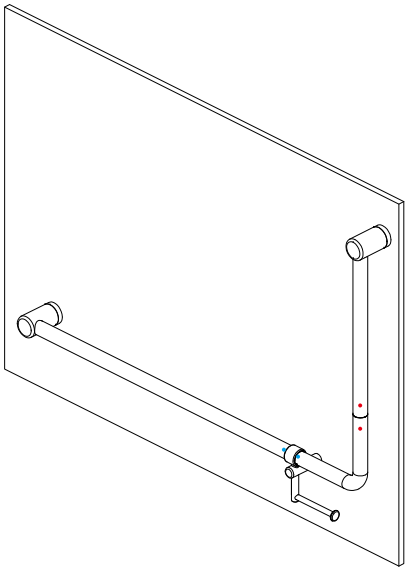

12. Confirm that all connections are securely tightened.

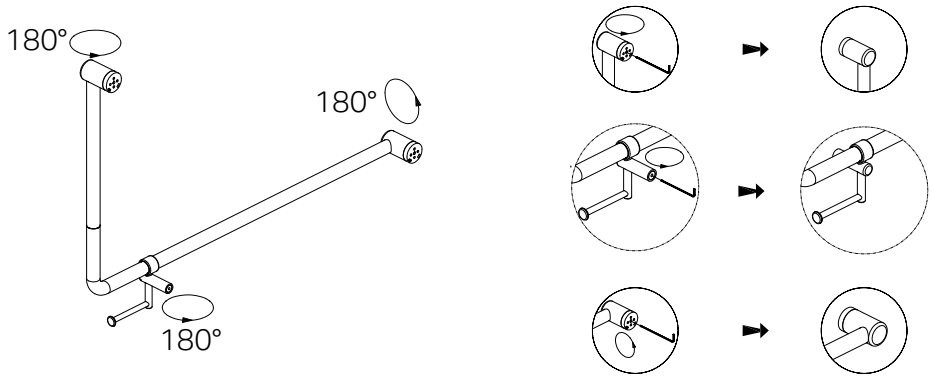

Note: The rail has been pre assembled as left hand, can be easily changed to right hand during installation. Loosen the grub screws inside the three end brackets and rotate 180 degree then retighten grub screws.

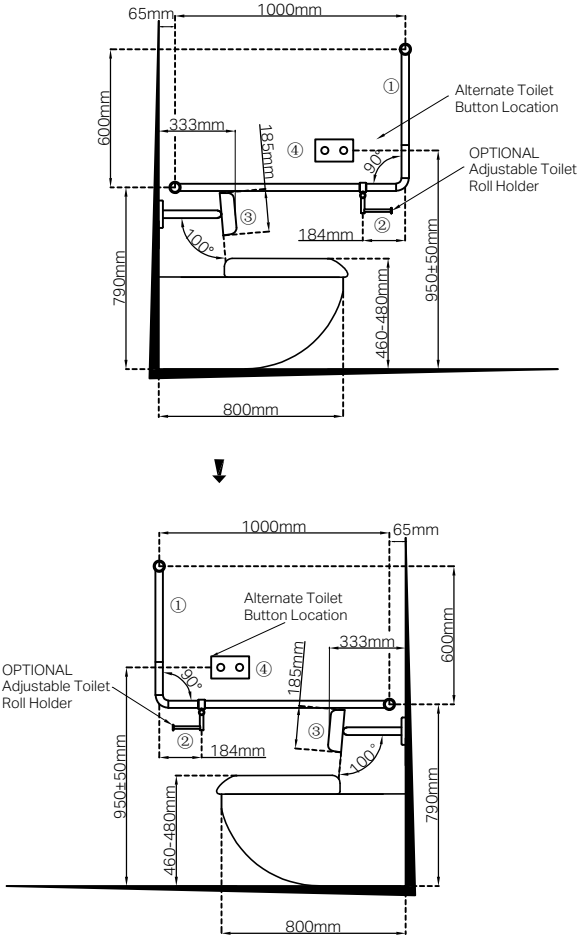

Nero

25 YEARS WARRANTY 25 YEARS WARRANTY

MECCA CARE
DDA CARE 32MM