Estella

LK-ME600W-MW/MB





- **Features** — A modern wall-hung PVC vanity cabinet. Features a middle door plus side drawers for ample storage. Soft-close doors & drawers deliver quiet, smooth operation. Minimal floating silhouette brings sleek, upscale aesthetics to your bathroom.
- **Cabinet Size** — 590x495x400mm
- **Carton Size** — 650x555x470mm
- **Net weight** — 19.00kg
- **Gross weight** — 24.00kg

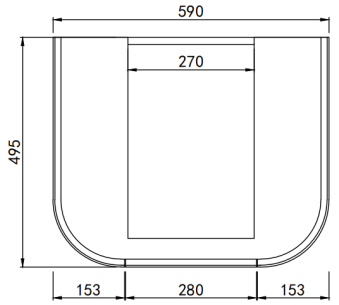

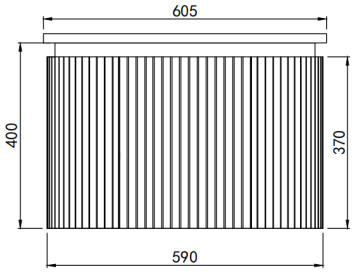

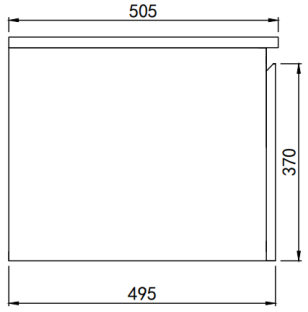

- **Available Finishes**

Matte White(MW)

Matte Black(MB)

- **Cleaning and Care** — Clean with warm soapy water using a microfibre cloth
  Harsh detergents or bleach may damage the surface of the vanity.
  Excessive force may result in scratching
- **Warranty** — 10 years limited warranty (see full warranty conditions on our website)