Estella

LK-ME900W-MW/MB



- **Features** A modern wall-hung PVC vanity cabinet. Equipped with a middle drawer plus side drawers for ample storage. Soft-close drawers deliver quiet, smooth operation. Minimal floating silhouette brings sleek, upscale aesthetics to your bathroom.
- **Cabinet Size** 890x495x400mm
- **Carton Size** 950x555x470mm
- **Net weight** 28.00kg
- **Gross weight** 35.00kg



- **Available Finishes**

Matte White(MW)

Matte Black(MB)

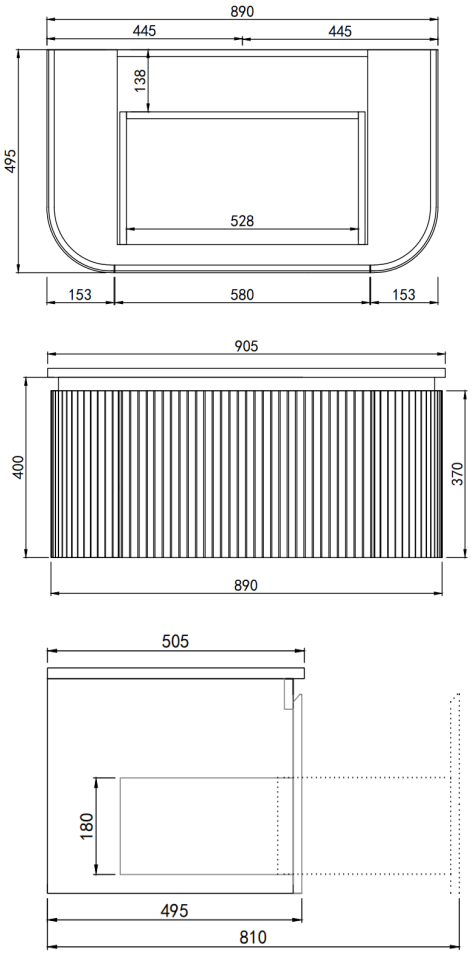

- **Cleaning and Care** Clean with warm soapy water using a microfibre cloth
  Harsh detergents or bleach may damage the surface of the vanity.
  Excessive force may result in scratching
- **Warranty** 10 years limited warranty (see full warranty conditions on our website)