Millennium

Mixers • Showers • Accesories • Baths • Basins



SONIX PULLOUT SINK MIXER GUN METAL

11017GM

- **Contemporary new design**
- **Available in 8 finishes**
- **15 year conditional warranty**
- **Wels Rating 5 Star 6 l/min**
- **Maximum operating pressure 500kpa**
- **Minimum operating pressure 150kpa**
- **Maximum water temperature 80 degrees**
- **Must be installed by a licensed plumber**
- **Isolation stops must be installed inline before flex connectors**

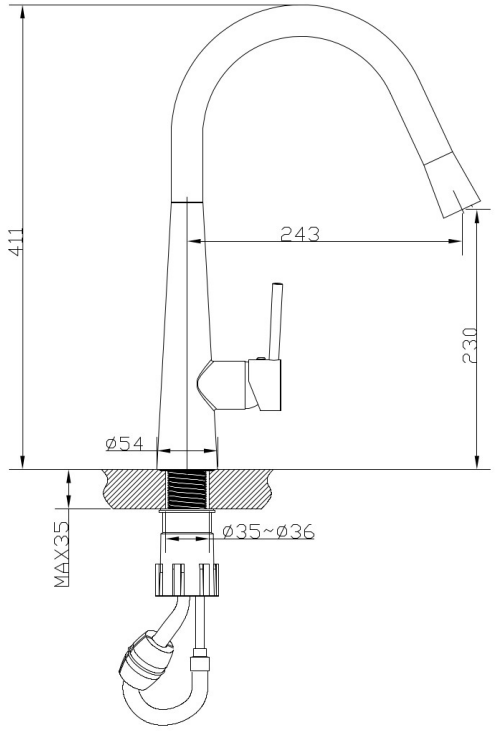

MILLENNIUM TAPWARE **by Peter W. Eldering Pty. Ltd.**

NSW: 7 HARLEY CRES, CONDELL PARK, NSW 2200, PH: 02 9791 9655
FAX: 02 9791 9611 E: sales@eldering.com.au

QLD: 5/30 McCOTTER ST, ACACIA RIDGE, QLD 4110, PH: 07 3273 1071
FAX 07 3273 4038 E: qld@millenniumtapware.com.au

www.millenniumtapware.com.au