Nero

Serenity Progressive Basin Mixer Arc Spout With Arabescato Corchia Handle

Finish & SKU

Chrome
24E034 CH

Brushed Nickel
24E034 BN

Matte Black
24E034 MB

Brushed Gold
24E034 BG

Brushed Bronze
24E034 BZ

Gun Metal
24E034 GM



Specifications

Watermark License
WM-060073

Temperature Rating
Min 1°C-Max 75°C

Pressure Rating
Min 150kpa-Max 500kpa

WATER RATING
www.waterrating.gov.au
5.0 litres per minute
Licence No. 1225

25 YEARS WARRANTY

Lead Free

Features

- Features an elegant arc spout with a 180-degree swivel function for enhanced flexibility and convenience.
- Handle options include natural Italian marble (Carrara, Rome Travertine, Marquina Black) and customizable selections (Verde Apli, Calacatta Viola, Arabescato), alongside a sleek Metal Handle.
- Equipped with a progressive cartridge for smooth water flow and precise temperature control.
- Available in six stunning finishes: Chrome, Matte Black, Brushed Nickel, Brushed Gold, Gun Metal, and Brushed Bronze.
- Designed to complement modern bathroom aesthetics while delivering functionality and luxury.

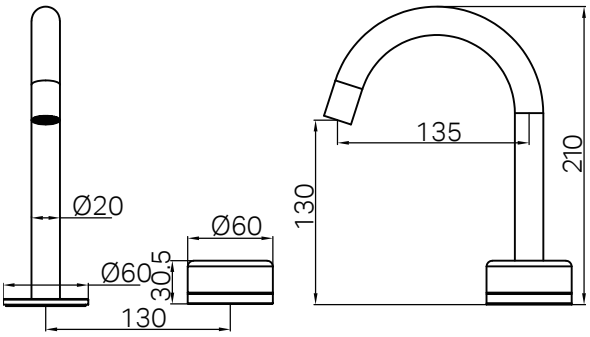

Maintenance And Care

- Regularly check the mixer and connections for signs of wear or leaks.
- Clean the tap with mild soapy water to maintain its appearance, avoiding harsh chemicals and abrasive materials that may damage the finish.
- Avoid contact with highly pigmented substances such as red wine, coffee, and ink, as they may cause permanent staining.

- Dimensions are nominal measurements only.