REMER

V2

BRACKET TYPE 1

Please check actual product in box for bracket type used (Hardwire)

ARCH 700

LED MIRROR

PRODUCT CODE

GAR70D

SPECIFICATIONS	
WIDTH	700mm
HEIGHT	1000mm
DEPTH	35mm
WEIGHT	11kg
ORIENTATION	Portrait

LIGHTING SPECIFICATIONS	
CCT	2700K - 6500K
CRI	>80

INSTALLATION
Wall Mount
Hardwire
Input Voltage: 220-240v 50Hz

FEATURES
Copper Free Mirror
LED Lighting (Adjustable Colour Temperature)
Touch Sensor
Demister with 1 Hour Auto Cut-off

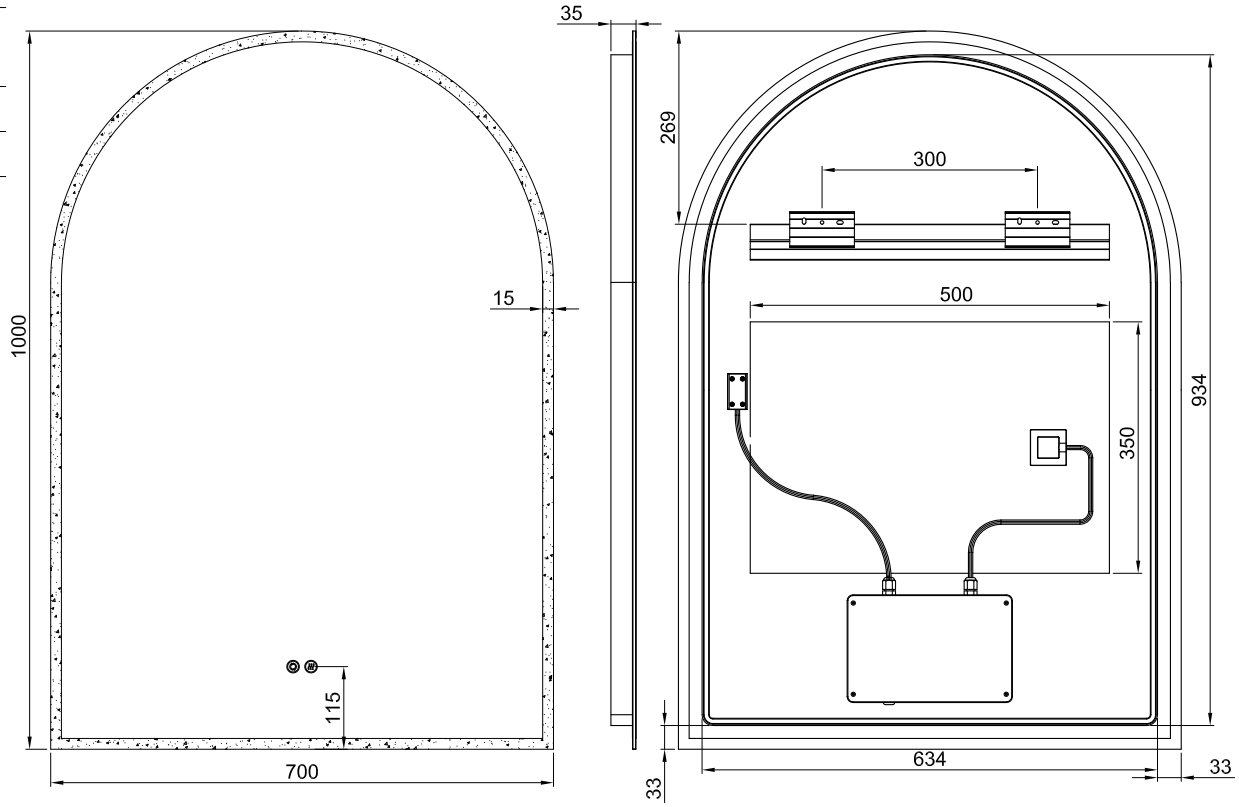

IP44

5 YEAR REPLACEMENT WARRANTY

Disclaimer: All LED Products requiring hardwiring must be installed by a licensed electrician in accordance with local regulations. Sizes are in mm and nominal and should be checked prior to installation. Actual colours may vary so please check colour samples before ordering. Installation is acceptance of our products. Installation of faulty, warped, chipped or damaged products will void our warranty.

13-15 Edison Road, Dandenong South VIC 3175
T (03) 9706 6663 E sales@remer.com.au W remer.com.au

REMER

REMER

V2

BRACKET TYPE 2

Please check actual product in box for bracket type used (Plug/Hardwire)

ARCH 700

LED MIRROR

PRODUCT CODE

GAR70D

SPECIFICATIONS	
WIDTH	700mm
HEIGHT	1000mm
DEPTH	35mm
WEIGHT	11kg
ORIENTATION	Portrait

LIGHTING SPECIFICATIONS	
CCT	2700K - 6500K
CRI	>80

INSTALLATION
Wall Mount
Plug or Hardwire
Input Voltage: 220-240v 50Hz

FEATURES
Copper Free Mirror
LED Lighting (Adjustable Colour Temperature)
Touch Sensor
Demister with 1 Hour Auto Cut-off

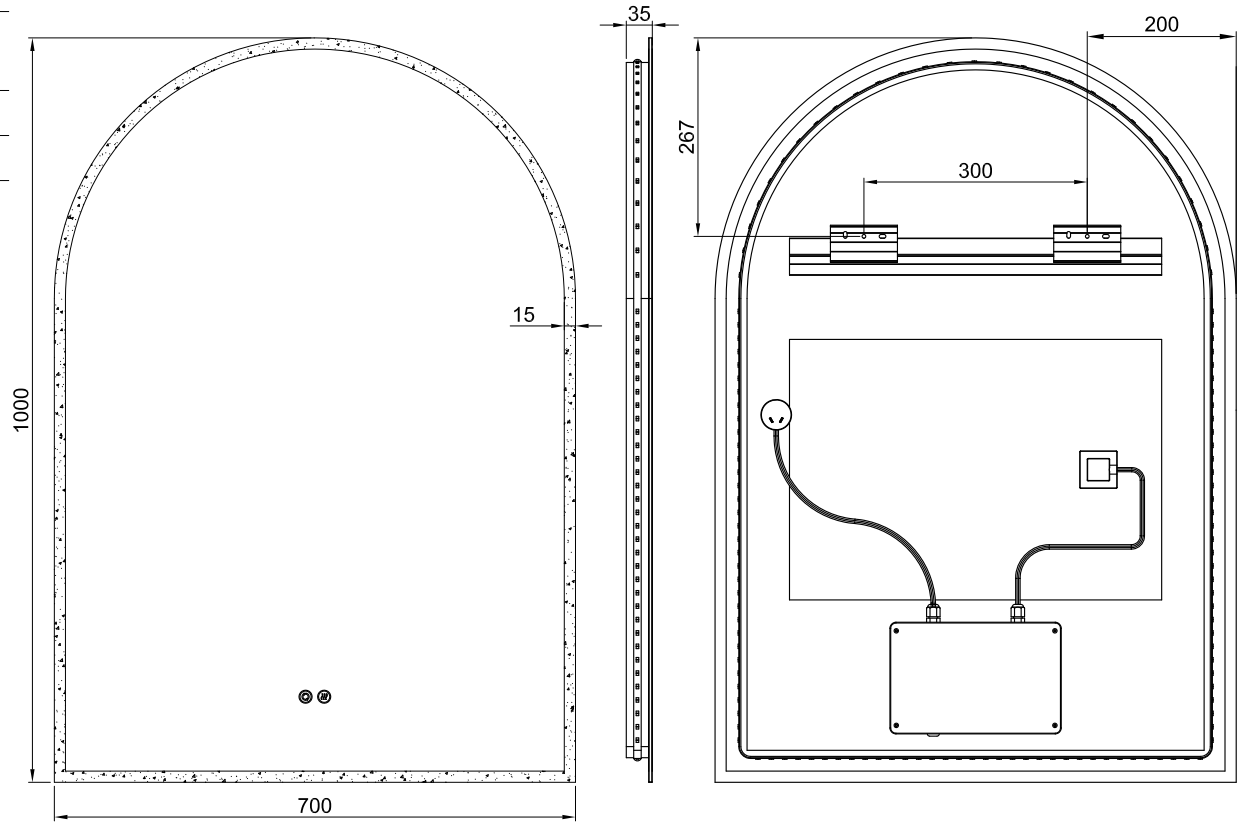

IP44

5 YEAR REPLACEMENT WARRANTY

Disclaimer: All LED Products requiring hardwiring must be installed by a licensed electrician in accordance with local regulations. Sizes are in mm and nominal and should be checked prior to installation. Actual colours may vary so please check colour samples before ordering. Installation is acceptance of our products. Installation of faulty, warped, chipped or damaged products will void our warranty.

13-15 Edison Road, Dandenong South VIC 3175
T (03) 9706 6663 E sales@remer.com.au W remer.com.au

REMER

REMER

V2

BRACKET TYPE 1

Please check actual product in box for bracket type used (Hardwire)

ARCH 700

LED MIRROR WITH ALUMINIUM FRAME

FINISH	PRODUCT CODE
Baltic Brass	GAR70D-BB
Brits Nickel	GAR70D-BN
Cuban Bronze	GAR70D-CB
Georgian Metal	GAR70D-GM

FINISH	PRODUCT CODE
Manhattan Black	GAR70D-MB
Milano White	GAR70D-MW
Nordic Gold	GAR70D-NG

SPECIFICATIONS	
WIDTH	705mm
HEIGHT	1005mm
DEPTH	40mm
WEIGHT	11kg
ORIENTATION	Portrait

LIGHTING SPECIFICATIONS	
CCT	2700K - 6500K
CRI	>80

INSTALLATION
Wall Mount
Hardwire
Input Voltage: 220-240v 50Hz

FEATURES
Copper Free Mirror
LED Lighting (Adjustable Colour Temperature)
Touch Sensor
Demister with 1 Hour Auto Cut-off

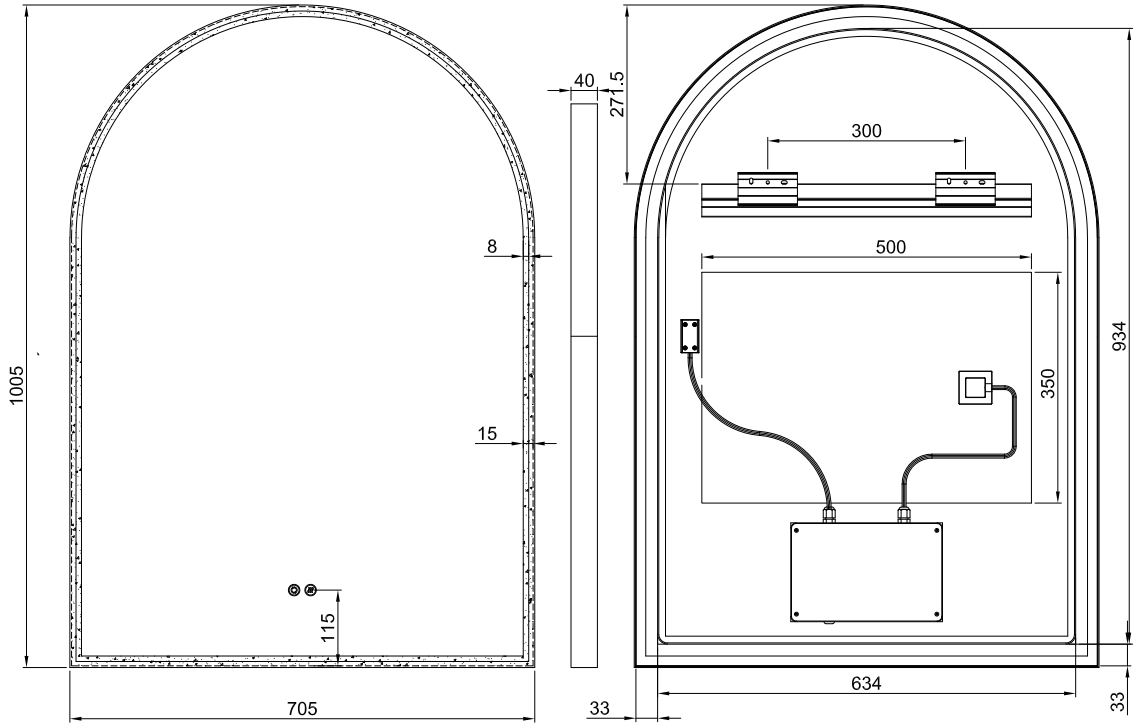

IP44

5 YEAR REPLACEMENT WARRANTY

Disclaimer: All LED Products requiring hardwiring must be installed by a licensed electrician in accordance with local regulations. Sizes are in mm and nominal and should be checked prior to installation. Actual colours may vary so please check colour samples before ordering. Installation is acceptance of our products. Installation of faulty, warped, chipped or damaged products will void our warranty.

13-15 Edison Road, Dandenong South VIC 3175
T (03) 9706 6663 E sales@remer.com.au W remer.com.au

REMER

REMER

BRACKET TYPE 2

Please check actual product in box for bracket type used (Plug/Hardwire)

ARCH 700

LED MIRROR WITH ALUMINIUM FRAME

SPECIFICATIONS	
WIDTH	705mm
HEIGHT	1005mm
DEPTH	40mm
WEIGHT	11kg
ORIENTATION	Portrait

LIGHTING SPECIFICATIONS	
CCT	2700K - 6500K
CRI	>80

INSTALLATION
Wall Mount
Plug or Hardwire
Input Voltage: 220-240v 50Hz

FEATURES
Copper Free Mirror
LED Lighting (Adjustable Colour Temperature)
Touch Sensor
Demister with 1 Hour Auto Cut-off

FINISH	PRODUCT CODE
Baltic Brass	GAR70D-BB
Brits Nickel	GAR70D-BN
Cuban Bronze	GAR70D-CB
Georgian Metal	GAR70D-GM

FINISH	PRODUCT CODE
Manhattan Black	GAR70D-MB
Milano White	GAR70D-MW
Nordic Gold	GAR70D-NG

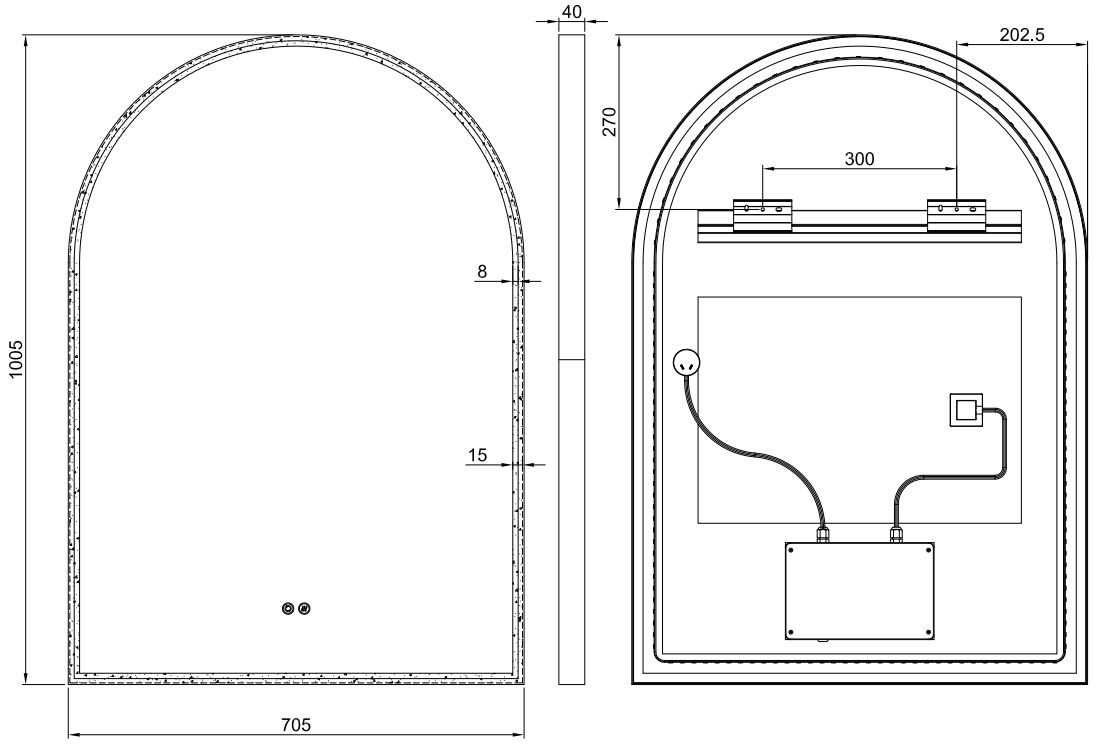

IP44

5 YEAR REPLACEMENT WARRANTY

Disclaimer: All LED Products requiring hardwiring must be installed by a licensed electrician in accordance with local regulations. Sizes are in mm and nominal and should be checked prior to installation. Actual colours may vary so please check colour samples before ordering. Installation is acceptance of our products. Installation of faulty, warped, chipped or damaged products will void our warranty.

13-15 Edison Road, Dandenong South VIC 3175
T (03) 9706 6663 E sales@remer.com.au W remer.com.au

REMER