Verso Rail Shower



Hand held rail shower

Product details

Shower components include:

- Three-function hand shower (ABS)
- Rail (stainless steel construction)
- Elbow (brass)
- PVC hose, 1500 mm

Available in 2 finishes

- Chrome
- Black Matte

Ratings and installation

WELS RATING	3 Star 8.5 L/min. Reg No S15549, S15548.
INSTALLATION	Must be installed by a licensed plumber.

Order codes

191980	Verso Rail Shower, stainless steel rail – Chrome
191981	Verso Rail Shower, stainless steel rail – Black Matte

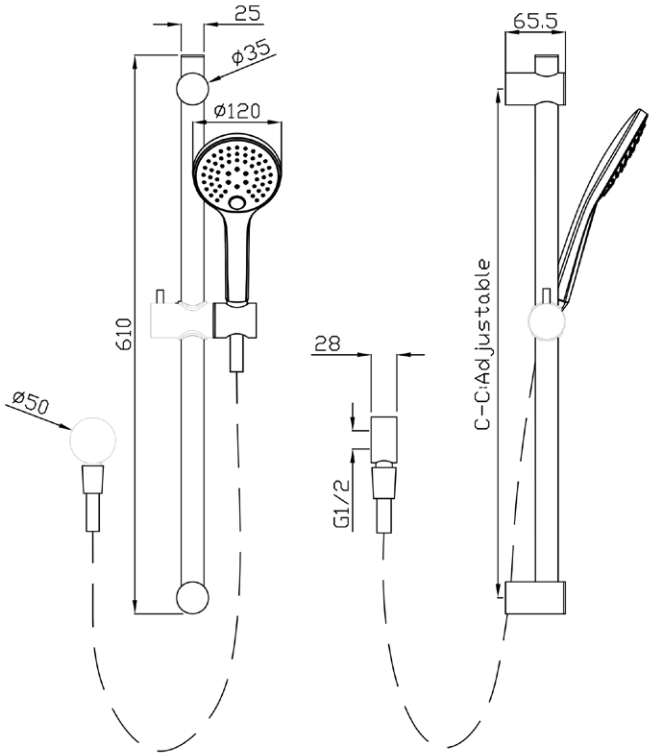

SEIMA

kitchen + laundry + bathroom ware

seima.com.au

Please note

- All measurements are in millimetres.
- Use silicone sealant. Do not use epoxy type adhesives.
- Specifications may vary without notice as part of our continuous improvement practices.
- Clean with a damp cloth. Do not use abrasive cleaners, liquids or pastes.