REMER

V2

BRACKET TYPE 1

Please check actual product in box for bracket type used

SPHERE 800DB

LED MIRROR

PRODUCT CODE

S80DB

SPECIFICATIONS	
WIDTH	800mm
HEIGHT	800mm
DEPTH	40mm
WEIGHT	11kg

LIGHTING SPECIFICATIONS	
CCT	2700K - 6500K
CRI	>80

INSTALLATION
Wall mount
Hardwire
Input voltage: 220-240v 50Hz

FEATURES
Copper Free Mirror
LED Lighting (Adjustable Colour Temperature)
Backlit
Touch Sensor
Demister with 1 Hour Auto Cut-off
Bluetooth Speakers

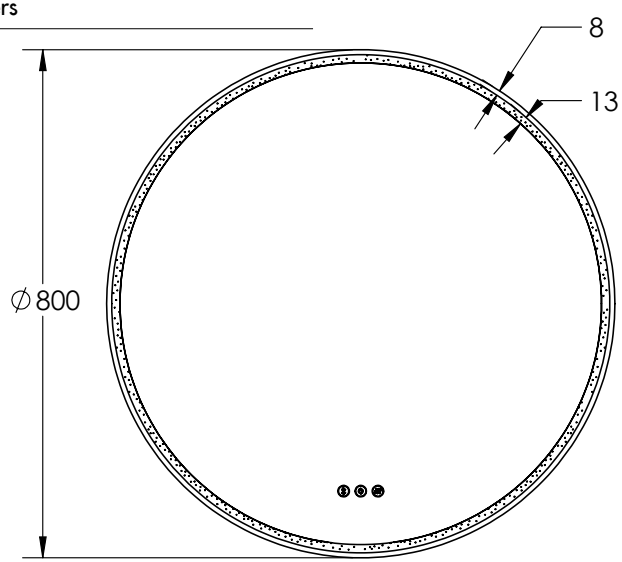

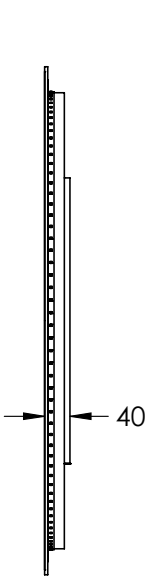

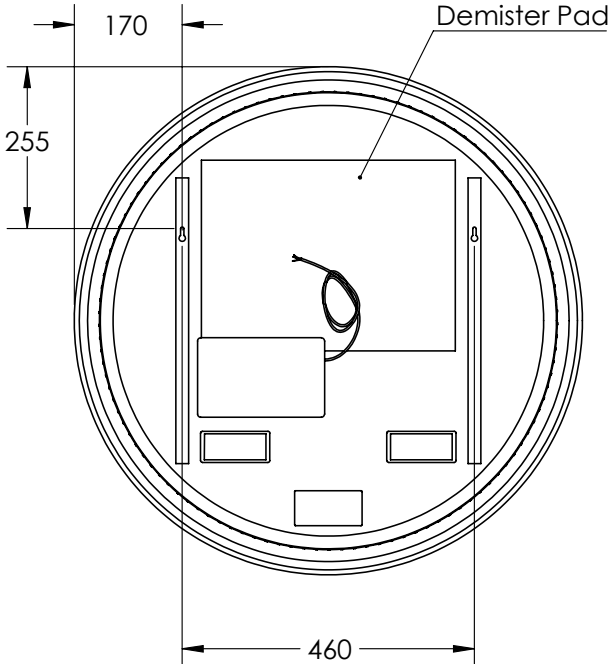

IP44

5 YEAR REPLACEMENT WARRANTY

Disclaimer: All LED Products requiring hardwiring must be installed by a licensed electrician in accordance with local regulations. Sizes are in mm and nominal and should be checked prior to installation. Actual colours may vary so please check colour samples before ordering. Installation is acceptance of our products. Installation of faulty, warped, chipped or damaged products will void our warranty.

13-15 Edison Road, Dandenong South VIC 3175
T (03) 9706 6663 E sales@remer.com.au W remer.com.au

REMER

REMER

V2

BRACKET TYPE 2

Please check actual product in box for bracket type used

SPHERE 800DB

LED MIRROR

PRODUCT CODE

S80DBB

SPECIFICATIONS	
WIDTH	800mm
HEIGHT	800mm
DEPTH	35mm
WEIGHT	11kg

LIGHTING SPECIFICATIONS	
CCT	2700K - 6500K
CRI	>80

INSTALLATION
Wall Mount
Hardwire
Input Voltage: 220-240v 50Hz

FEATURES
Copper Free Mirror
LED Lighting (Adjustable Colour Temperature)
Touch Sensor
Demister with 1 Hour Auto Cut-off
Bluetooth Speakers

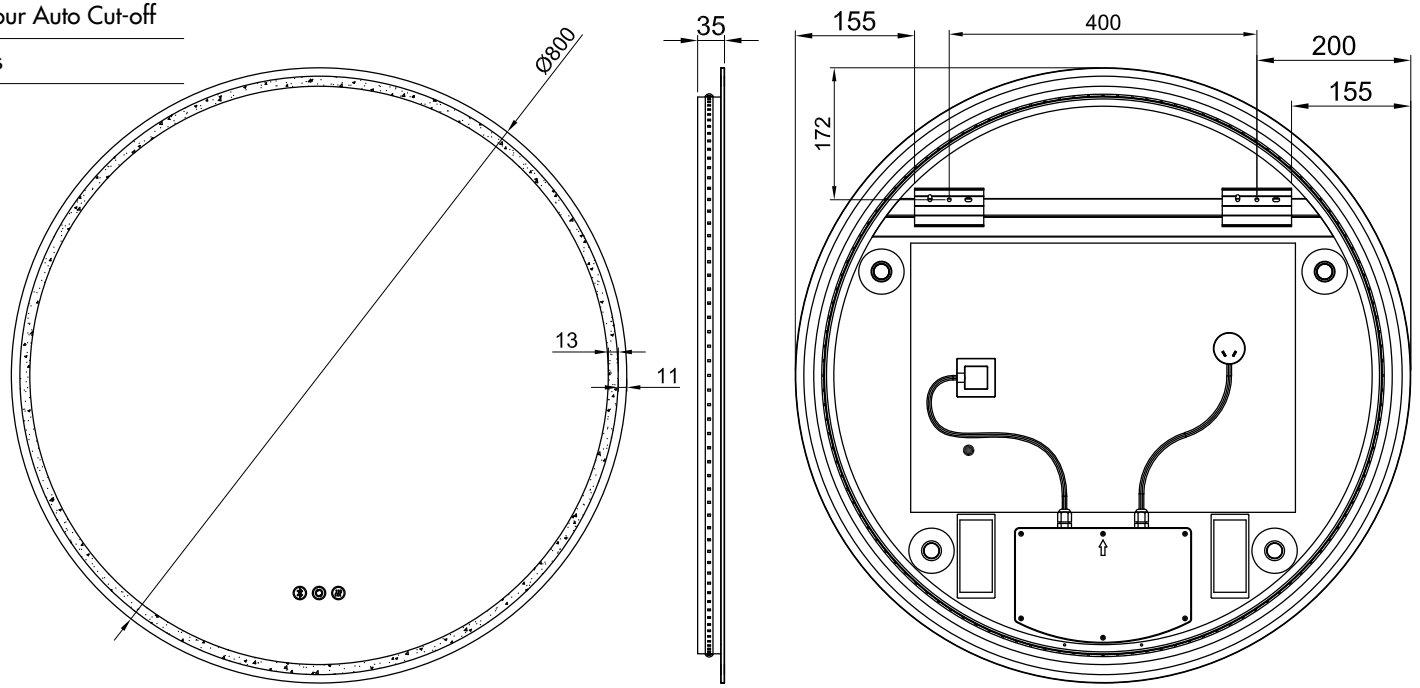

IP44

5 YEAR REPLACEMENT WARRANTY

Disclaimer: All LED Products requiring hardwiring must be installed by a licensed electrician in accordance with local regulations. Sizes are in mm and nominal and should be checked prior to installation. Actual colours may vary so please check colour samples before ordering. Installation is acceptance of our products. Installation of faulty, warped, chipped or damaged products will void our warranty.

13-15 Edison Road, Dandenong South VIC 3175
T (03) 9706 6663 E sales@remer.com.au W remer.com.au

REMER

REMER

V2

BRACKET TYPE 1

Please check actual product in box for bracket type used

SPHERE 800DB

LED MIRROR WITH ALUMINIUM FRAME

FINISH	PRODUCT CODE
Baltic Brass	S80DB-BB
Brits Nickel	S80DB-BN
Cuban Bronze	S80DB-CB
Georgian Metal	S80DB-GM

FINISH	PRODUCT CODE
Manhattan Black	S80DB-MB
Milano White	S80DB-MW
Nordic Gold	S80DB-NG

SPECIFICATIONS	
WIDTH	810mm
HEIGHT	810mm
DEPTH	45mm
WEIGHT	12kg

LIGHTING SPECIFICATIONS	
CCT	2700K - 6500K
CRI	>80

INSTALLATION
Wall mount
Hardwire
Input voltage: 220-240v 50Hz

FEATURES
Copper Free Mirror
LED Lighting (Adjustable Colour Temperature)
Frontlit
Touch Sensor
Demister with 1 Hour Auto Cut-off
Bluetooth Speakers
Coloured Aluminium Frame

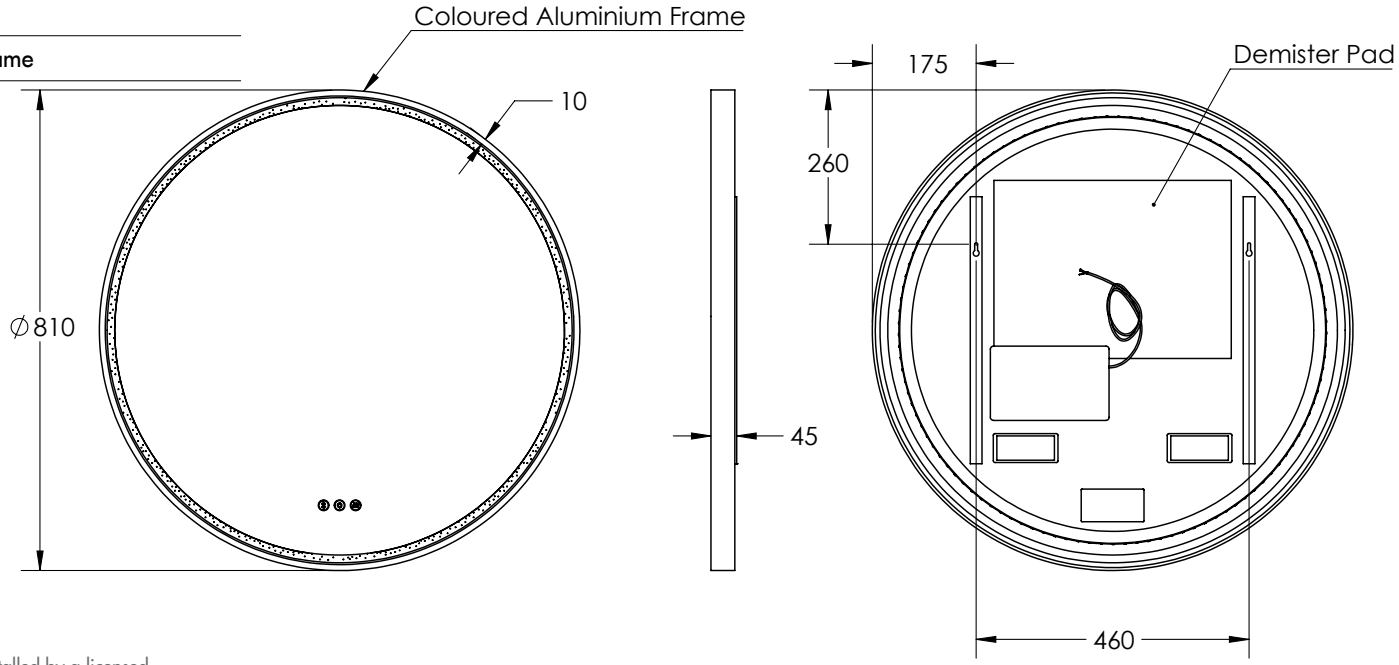

IP44

5 YEAR REPLACEMENT WARRANTY

Disclaimer: All LED Products requiring hardwiring must be installed by a licensed electrician in accordance with local regulations. Sizes are in mm and nominal and should be checked prior to installation. Actual colours may vary so please check colour samples before ordering. Installation is acceptance of our products. Installation of faulty, warped, chipped or damaged products will void our warranty.

13-15 Edison Road, Dandenong South VIC 3175
T (03) 9706 6663 E sales@remer.com.au W remer.com.au

REMER

REMER

V2

BRACKET TYPE 2

Please check actual product in box for bracket type used

SPHERE 800DB

LED MIRROR

FINISH	PRODUCT CODE
Baltic Brass	S80DB-BB
Brits Nickel	S80DB-BN
Cuban Bronze	S80DB-CB
Georgian Metal	S80DB-GM

FINISH	PRODUCT CODE
Manhattan Black	S80DB-MB
Milano White	S80DB-MW
Nordic Gold	S80DB-NG

SPECIFICATIONS	
WIDTH	805mm
HEIGHT	805mm
DEPTH	45mm
WEIGHT	11kg

LIGHTING SPECIFICATIONS	
CCT	2700K - 6500K
CRI	>80

INSTALLATION
Wall Mount
Hardwire
Input Voltage: 220-240v 50Hz

FEATURES
Copper Free Mirror
LED Lighting (Adjustable Colour Temperature)
Touch Sensor
Demister with 1 Hour Auto Cut-off
Bluetooth Speakers

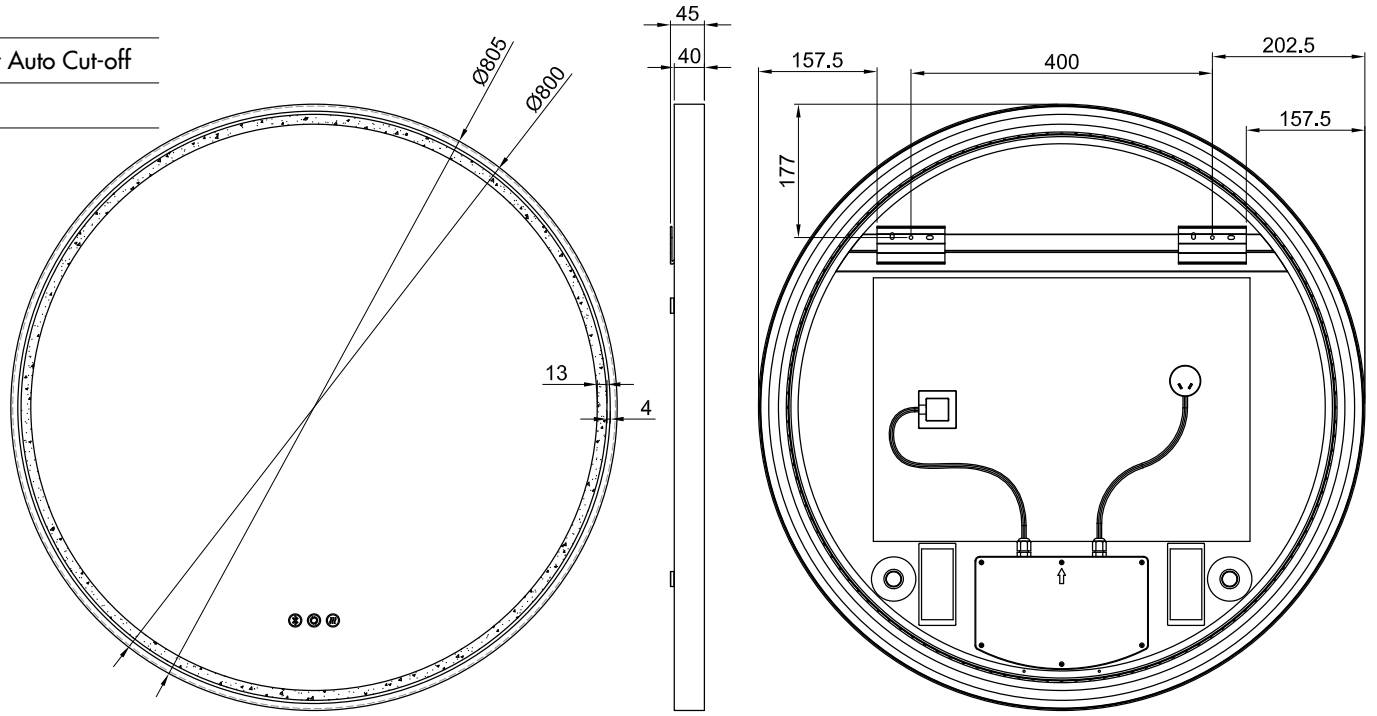

IP44

5 YEAR REPLACEMENT WARRANTY

Disclaimer: All LED Products requiring hardwiring must be installed by a licensed electrician in accordance with local regulations. Sizes are in mm and nominal and should be checked prior to installation. Actual colours may vary so please check colour samples before ordering. Installation is acceptance of our products. Installation of faulty, warped, chipped or damaged products will void our warranty.

13-15 Edison Road, Dandenong South VIC 3175
T (03) 9706 6663 E sales@remer.com.au W remer.com.au

REMER