Lillian

HEATED TOWEL RAIL, 600 x 450 MM

Features

- Designed for use in bathrooms
- Modern vintage design
- Heat transfer dries towels faster and more evenly keeping them fresh
- 4 bar ladder rails
- Concealed (hard-wired) wiring installation
- Wiring position at top right or bottom left mounting points
- Surface temperature between 45°C and 50°C
- Made from 304 stainless steel

230V | 50W | IP55 RATING
SAA Approved

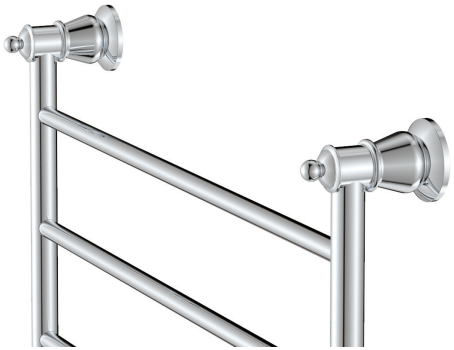

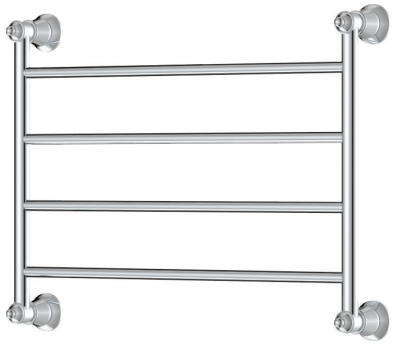

Modern Vintage COLLECTION

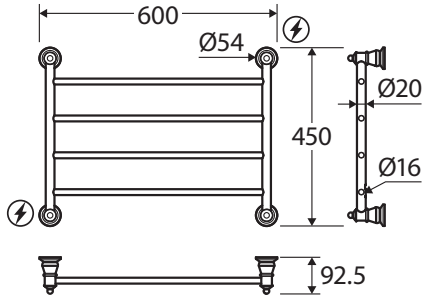

Wiring Positions

Available in

Chrome
8106045

PVD Brushed Nickel
8106045BN

Powder Coated Matte Black
8106045MB

PVD Urban Brass
8106045UB

Cleaning & Care

- Regularly clean with mild soapy water using a microfibre cloth.
- In highly polluted or coastal locations, we recommend cleaning 2-3 times per week.
- Do not use harsh detergents, bleach, cream cleaners or citrus based cleaners. These substances are abrasive and will damage the surface.
- Do not use undue pressure and wipe in one direction only

While we aim to ensure specifications are correct at the time of publication, Fienza reserves the right to make modifications without prior notice. Physical colour may vary from image shown.
All measurements are shown in millimetres. Always use physical product measurements for mark-ups and roughing-in as the technical drawing may differ from actual product received.