Ablaze Non-Lit Magnifying Mirrors

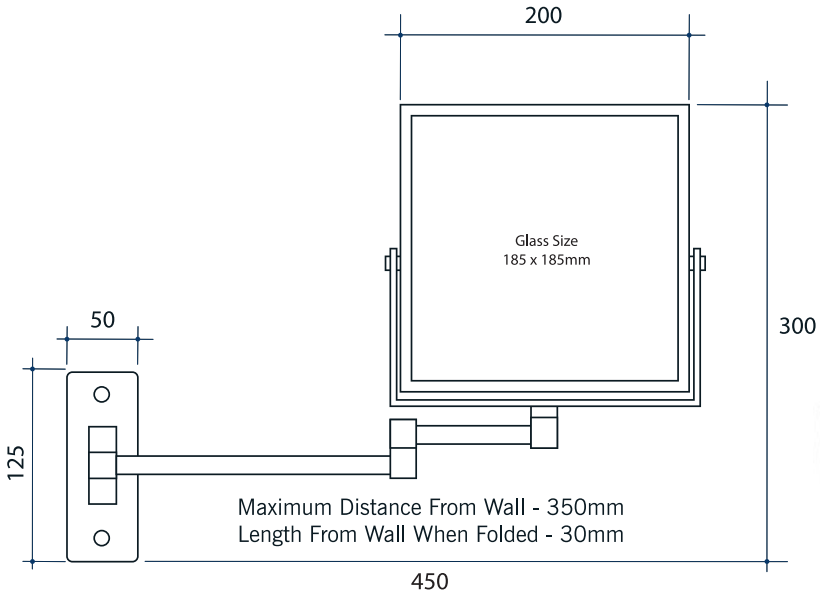



Note: All dimensions are in millimetres (mm)

Stock Code	Finish	Type
S15SMB	Matt Black	Wall Mounted

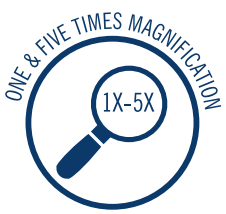



Please note: Mirrors will need to be installed in accordance with the Installation Guide. Ablaze does not take responsibility for incorrect installation of these mirrors.