Ablaze Non-Lit Magnifying Mirrors

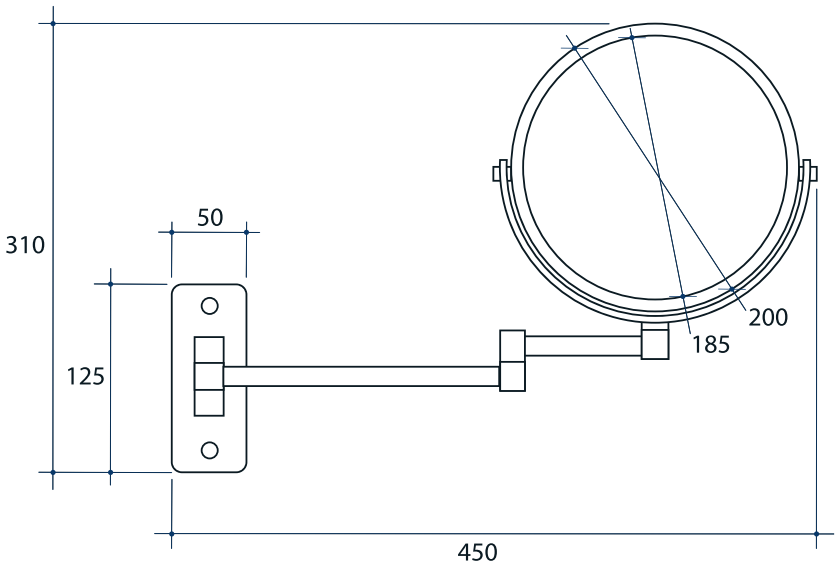



Maximum Distance From Wall 330mm
Length From Wall When Folded - 30mm

Note: All dimensions are in millimetres (mm)

Stock Code	Finish	Type
R18SM	Chrome Plated	Wall Mounted





Please note: Mirrors will need to be installed in accordance with the Installation Guide. Ablaze does not take responsibility for incorrect installation of these mirrors.