Nero

Classic Shower Mixer With Divertor

Finish & SKU

Chrome
NR110009aCH



Specifications

Watermark License
WM-060073
Temperature Rating
Min 1°C-Max 75°C
Pressure Rating
Min 150kpa-Max 500kpa

Warranty

Lead Free

Features

- 40mm ceramic cartridge can be adjusted to control water temperature and flow control setting, saving energy
- Metal wall plate construction for longevity
- Body inlets – ½ BSP female
- Suitable for mains pressure installation
- Wels rating not required

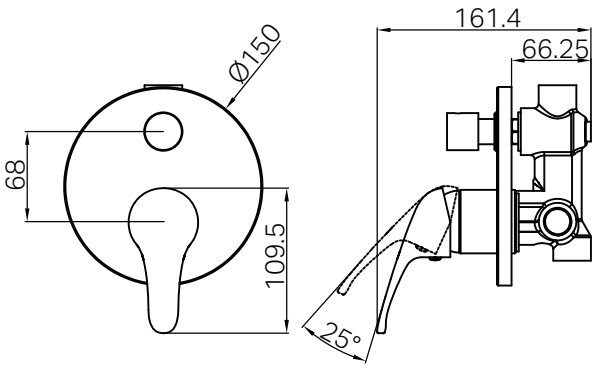

Maintenance And Care

- Regularly check the mixer and connections for signs of wear or leaks.
- Clean the tap with mild soapy water to maintain its appearance, avoiding harsh chemicals and abrasive materials that may damage the finish.

- Dimensions are nominal measurements only.