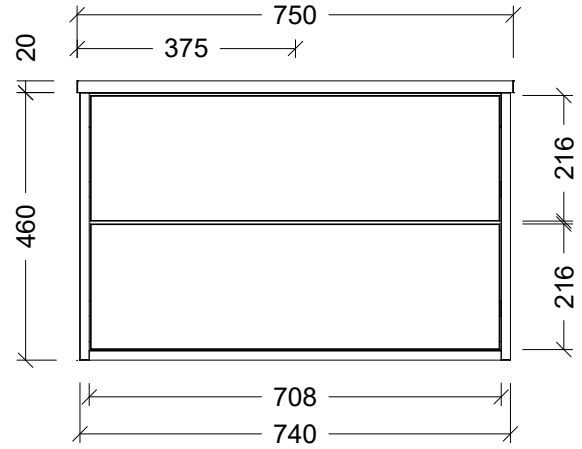

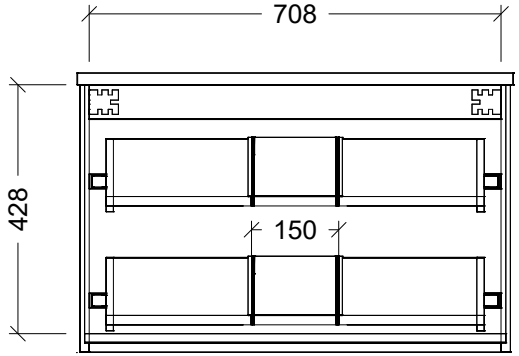

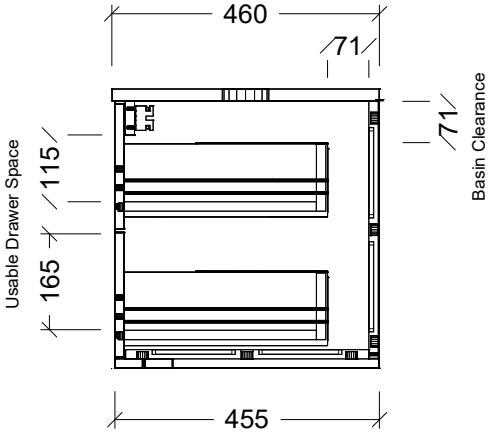

Range	Emmett
Mount	Wall Hung
Size	750
SKU	EMM-VCO-750-C-X-W

TOP DETAILS

Available Tops	SilkSurface
Top Notes	

NOTES

Revision	01
Date	12/02/24

DIMENSIONS SHOWN ARE IN MILLIMETERS, ARE NOMINAL ONLY AND SUBJECT TO CHANGE AT ANY TIME.
DO NOT SCALE DRAWINGS.
INSTALLER TO CONFIRM ALL DIMENSIONS ON-SITE PRIOR TO INSTALL.
SIZE VARIATION (+/- 3%) IS TO BE EXPECTED ON CERAMIC TOPS.
E&OE.

Copyright ©

Timberline

22 Myrtle Drive, Armidale NSW 2350
www.timberline.com.au
02 6773 8500

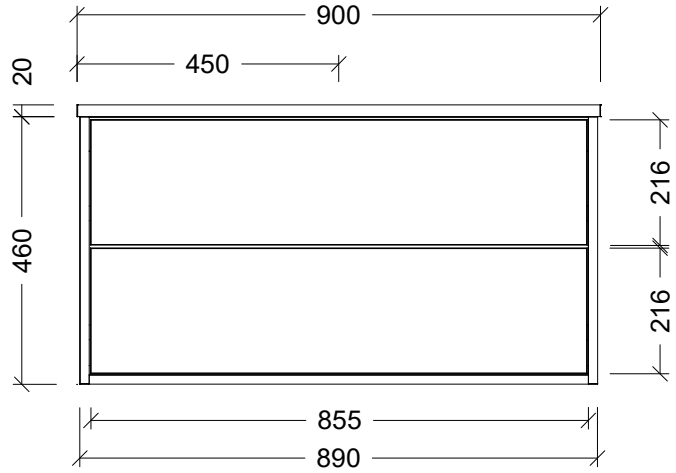

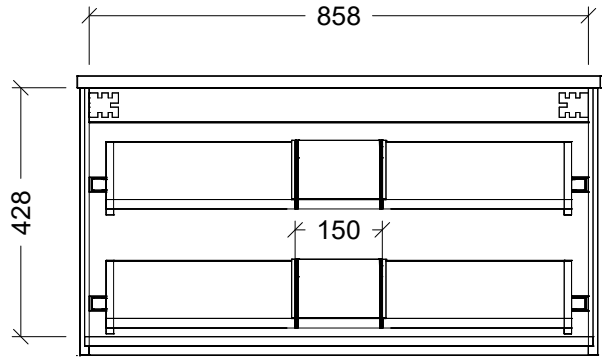

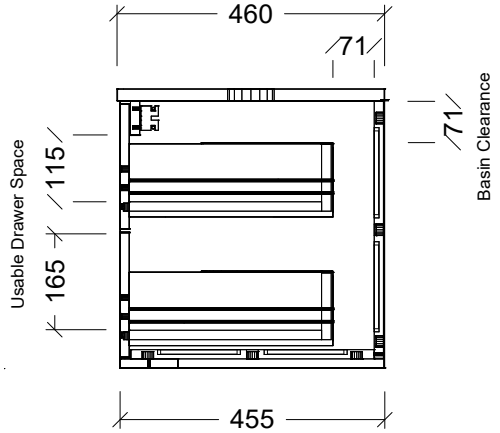

Range	Emmett
Mount	Wall Hung
Size	900
SKU	EMM-VCO-900-C-X-W

TOP DETAILS

Available Tops	SilkSurface

Top Notes

NOTES

Revision	01
Date	12/02/24

DIMENSIONS SHOWN ARE IN MILLIMETERS, ARE NOMINAL ONLY AND SUBJECT TO CHANGE AT ANY TIME.
DO NOT SCALE DRAWINGS.
INSTALLER TO CONFIRM ALL DIMENSIONS ON-SITE PRIOR TO INSTALL.
SIZE VARIATION (+/- 3%) IS TO BE EXPECTED ON CERAMIC TOPS.
E&OE.

Copyright ©

Timberline

22 Myrtle Drive, Armidale NSW 2350
www.timberline.com.au
02 6773 8500

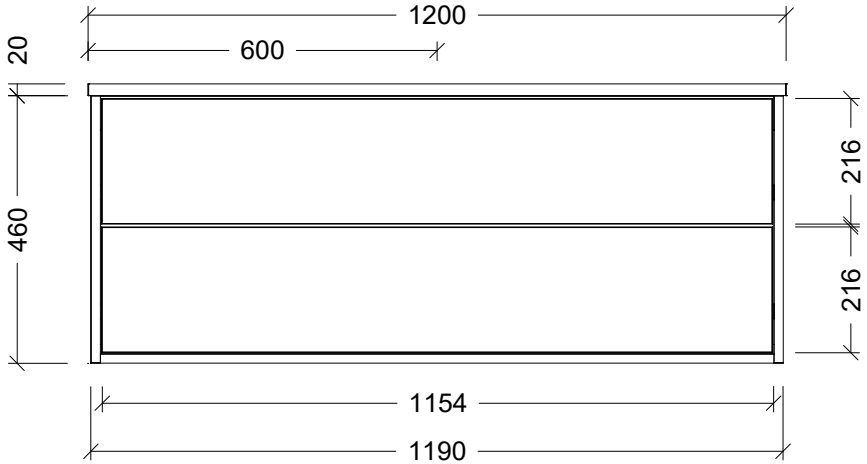

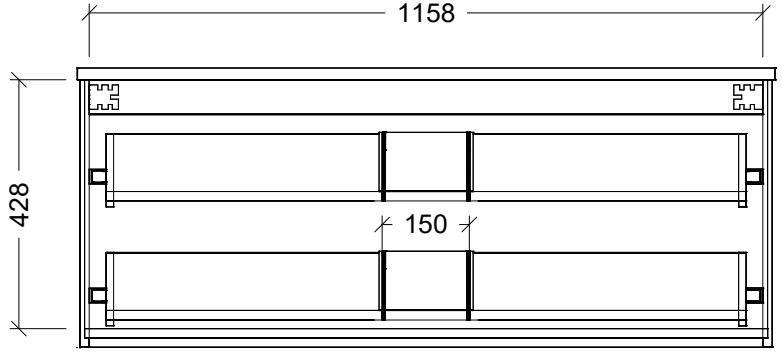

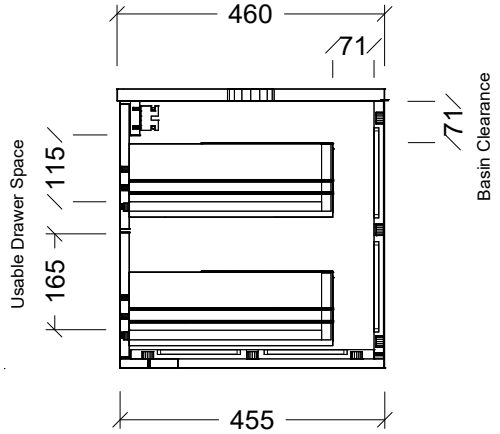

Range	Emmett
Mount	Wall Hung
Size	1200
SKU	EMM-VCO-1200-C-X-W

TOP DETAILS

Available Tops	SilkSurface

Top Notes

NOTES

Revision	01
Date	12/02/24

DIMENSIONS SHOWN ARE IN MILLIMETERS, ARE NOMINAL ONLY AND SUBJECT TO CHANGE AT ANY TIME.
DO NOT SCALE DRAWINGS.
INSTALLER TO CONFIRM ALL DIMENSIONS ON-SITE PRIOR TO INSTALL.
SIZE VARIATION (+/- 3%) IS TO BE EXPECTED ON CERAMIC TOPS.
E&OE.

Copyright ©

Timberline

22 Myrtle Drive, Armidale NSW 2350
www.timberline.com.au
02 6773 8500

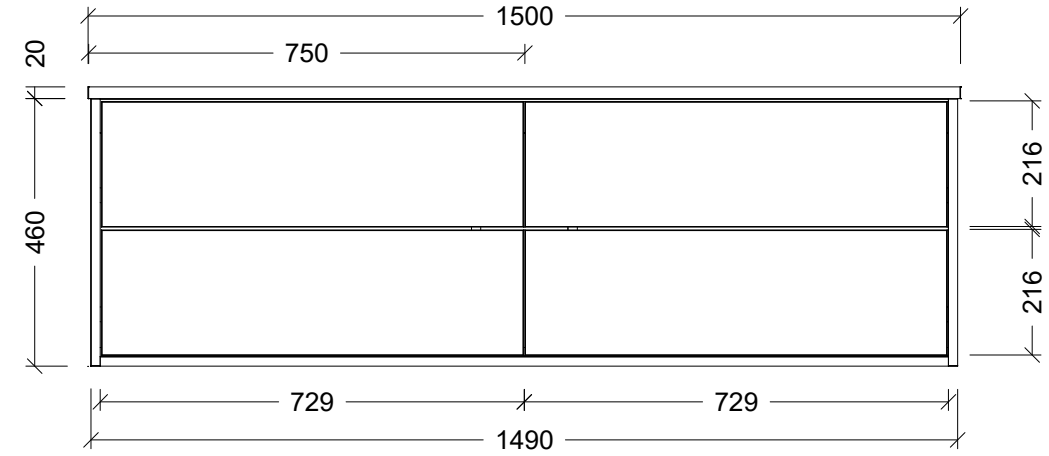

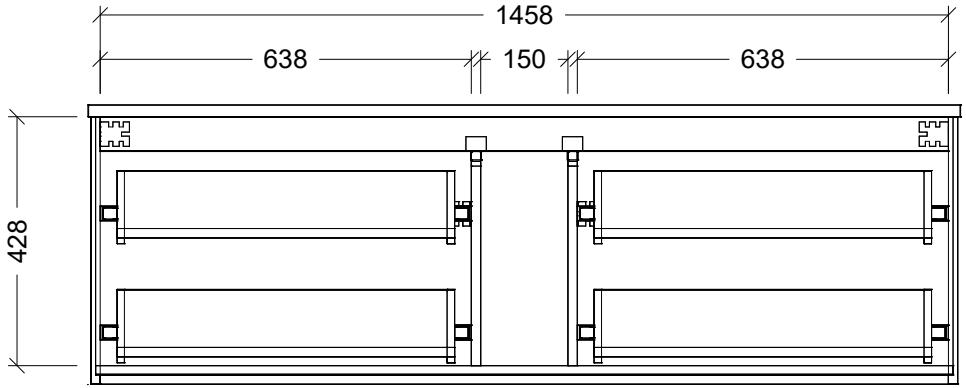

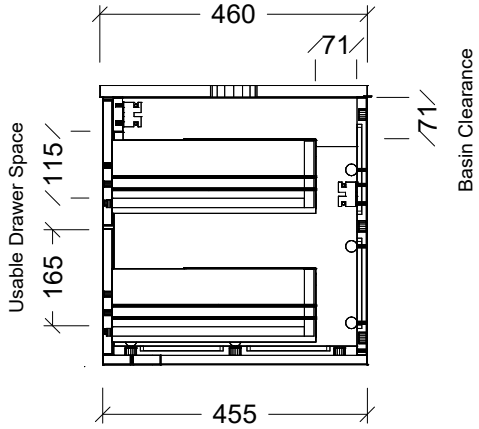

Range	Emmett
Mount	Wall Hung
Size	1500
SKU	EMM-VCO-1500-C-X-W

TOP DETAILS

Available Tops	SilkSurface

Top Notes

NOTES

Revision	01
Date	12/02/24

DIMENSIONS SHOWN ARE IN MILLIMETERS, ARE NOMINAL ONLY AND SUBJECT TO CHANGE AT ANY TIME.
DO NOT SCALE DRAWINGS.
INSTALLER TO CONFIRM ALL DIMENSIONS ON-SITE PRIOR TO INSTALL.
SIZE VARIATION (+/- 3%) IS TO BE EXPECTED ON CERAMIC TOPS.
E&OE.

Copyright ©

Timberline

22 Myrtle Drive, Armidale NSW 2350
www.timberline.com.au
02 6773 8500

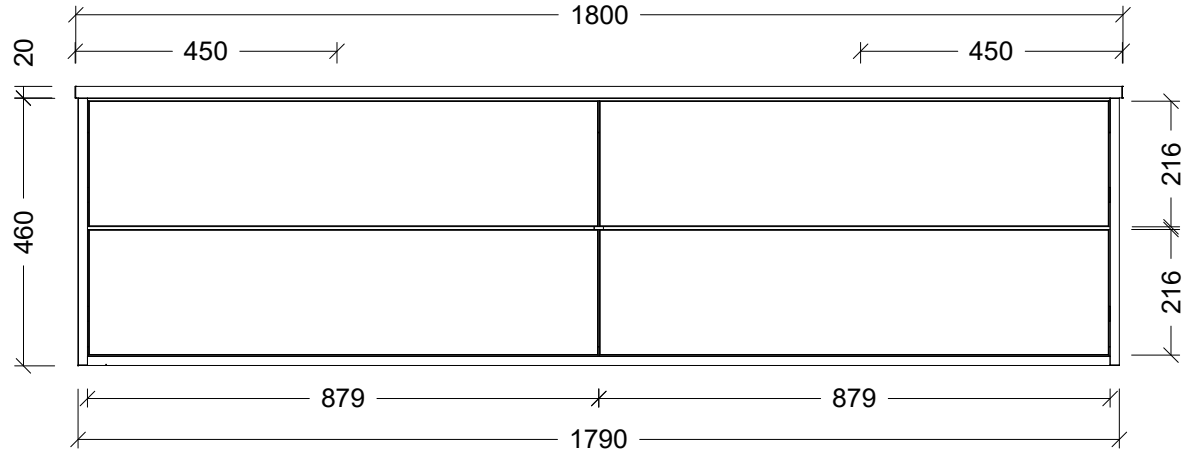

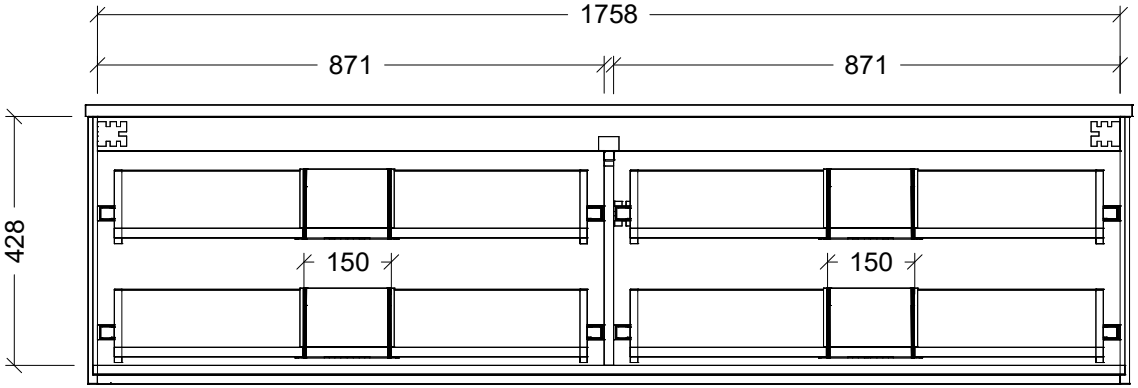

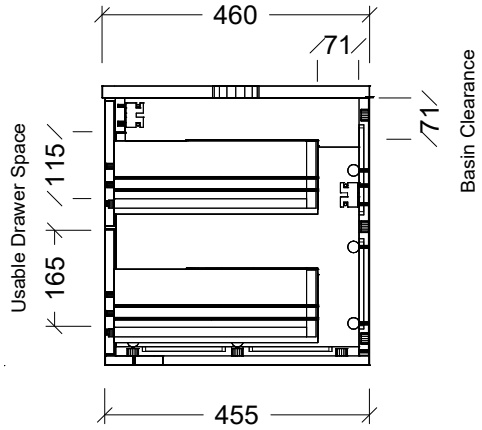

Range	Emmett
Mount	Wall Hung
Size	1800
SKU	EMM-VCO-1800-D-X-W

TOP DETAILS

Available Tops	SilkSurface

Top Notes

NOTES

Revision	01
Date	12/02/24

DIMENSIONS SHOWN ARE IN MILLIMETERS, ARE NOMINAL ONLY AND SUBJECT TO CHANGE AT ANY TIME.
DO NOT SCALE DRAWINGS.
INSTALLER TO CONFIRM ALL DIMENSIONS ON-SITE PRIOR TO INSTALL.
SIZE VARIATION (+/- 3%) IS TO BE EXPECTED ON CERAMIC TOPS.
E&OE.

Copyright ©

Timberline

22 Myrtle Drive, Armidale NSW 2350
www.timberline.com.au
02 6773 8500